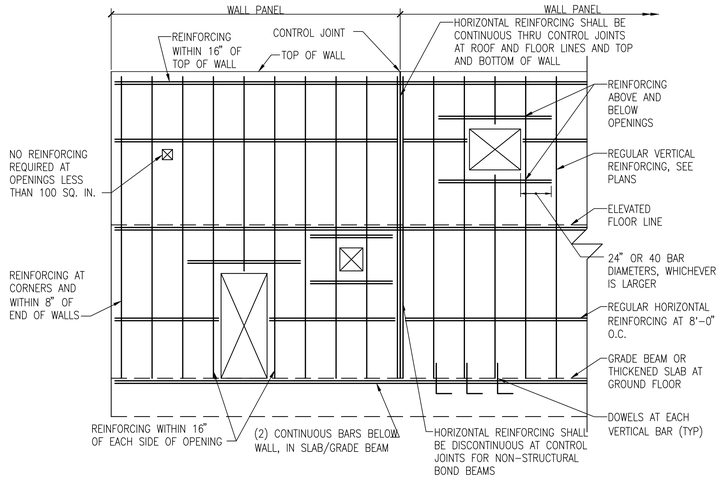

A TYPICAL MASONRY WALL REINFORCING
SCALE: 1/4" = 1'-0"

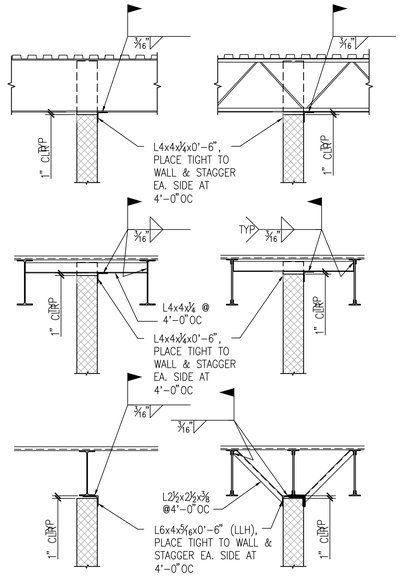

B TYPICAL CMU PARTITION BRACING
SCALE: 1/2" = 1'-0"

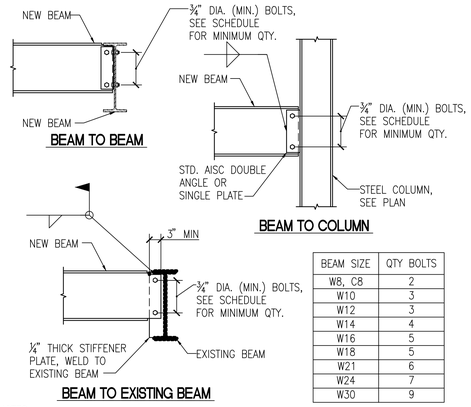

BEAM SIZE	QTY BOLTS
W8, C8	2
W10	3
W12	3
W14	4
W16	5
W18	5
W21	6
W24	7
W30	9

NOTES:

1. ALL BEAM CONNECTIONS SHALL BE DESIGNED FOR THE MAXIMUM OF THE FOLLOWING:
   A. THE FULL UNIFORM LOAD CAPACITY OF THE MEMBER WITH DUE CONSIDERATION OF CONCENTRATED LOADS.
   B. MINIMUM REACTION OF 6 KIPS.
   C. MINIMUM QUANTITY OF BOLTS PER SCHEDULE.

2. BOLTED CONNECTIONS SHALL USE NO LESS THAN TWO 3/4" DIA. ASTM A 325N OR A 490 HIGH STRENGTH BOLTS.
   CONFORM TO AISC SPECIFICATION "STRUCTURAL JOINTS USING ASTM A 325 OR A 490 BOLTS".

3. UNLESS OTHERWISE INDICATED, ALL WELDED CONNECTIONS SHALL USE E70XX ELECTRODES.

C TYPICAL AISC SHEAR CONECTIONS
SCALE: 3/4" = 1'-0"

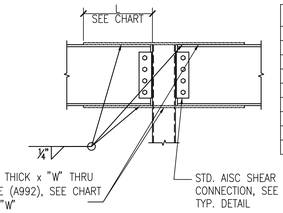

BEAM SIZE	L-PLATE	W-PLATE	WELD SIZE
W8	14"	12"	1/4"
W10	16"	6-1/2"	1/4"
W12	16"	7"	1/4"
W14	16"	6"	1/4"
W16	16"	6-1/2"	1/4"
W18	16"	6-1/2"	1/4"
W21	14"	7"	5/16"
W24	17"	7-1/2"	5/16"
W27	24"	12"	5/16"

D TYPICAL HSS COLUMN MOMENT CONNECTIONS
SCALE: 3/4" = 1'-0"

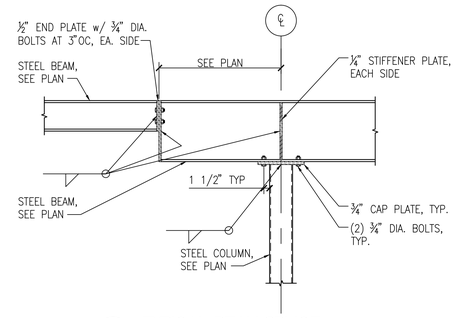

E TYPICAL BEAM SPLICE
SCALE: 3/4" = 1'-0"

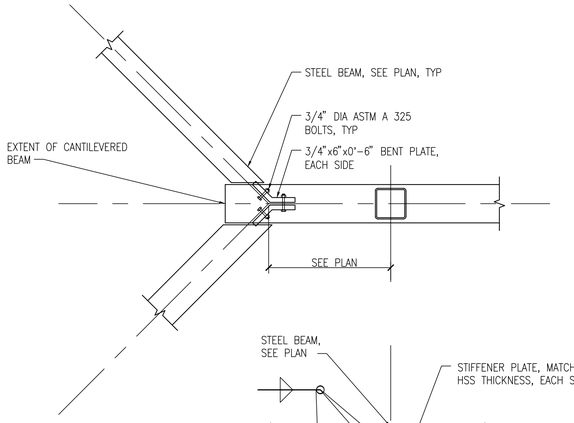

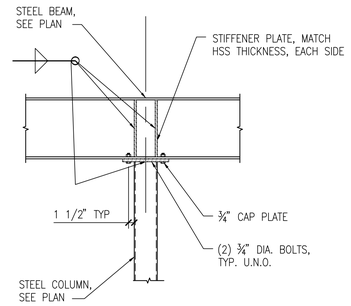

F CONNECTION AT CANTILEVERED BEAM ENDS
SCALE: 3/4" = 1'-0"

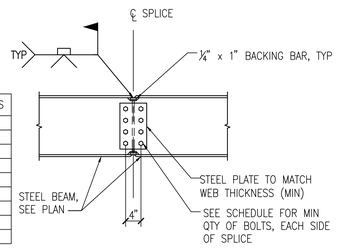

BEAM SIZE	QTY BOLTS
W8, C8	2
W10	3
W12	3
W14	4
W16	5
W18	5
W21	6
W24	7
W30	9

NOTE: FIELD SPLICE LOCATIONS MUST BE APPROVED BY ENGINEER PRIOR TO FABRICATION.

G TYPICAL FIELD SPLICE
SCALE: 3/4" = 1'-0"

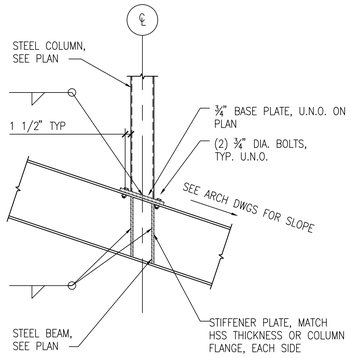

H TYPICAL COLUMN ON STEEL BEAM
SCALE: 3/4" = 1'-0"

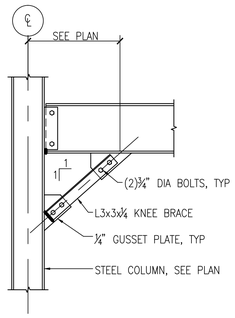

J TYPICAL KNEE BRACE CONNECTION
SCALE: 3/4" = 1'-0"

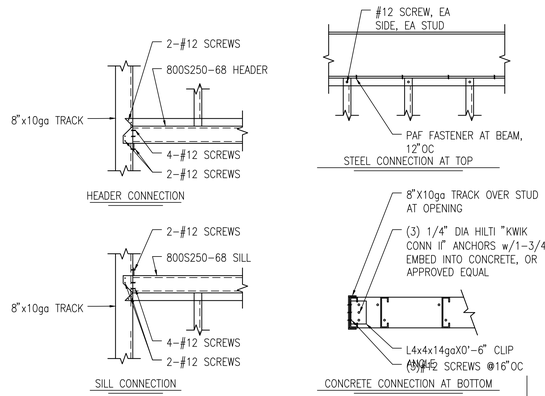

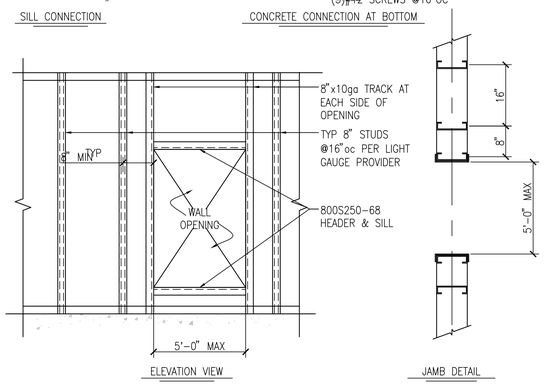

K ADDITIONAL REINF AT TYP LIGHT GAUGE WALL OPENING
SCALE: 3/4" = 1'-0"

FINAL SUBMISSION / FULLY SPRINKLERED

Revisions:	Date

CONSULTANTS:

CIVIL:
KENNETH HORNE & ASSOCIATES
7201 NORTH 9TH AVENUE, STE. 6
PENSACOLA, FLORIDA 32504
PH: (850) 471-9005
FX: (850) 471-0093

LANDSCAPE ARCHITECT:
CSA GROUP, INC.
6300 PICCADILLY SQUARE DRIVE
MOBILE, ALABAMA 36609
PH: (251) 344-4023
FX: (251) 344-4052

COMM/IDS:
SCHMIDT CONSULTING GROUP, INC.
40 S. PALAFOX PLACE, STE. 300
PENSACOLA, FLORIDA 32502
PH: (850) 438-0050
FX: (850) 432-8631

SURVEYORS:
KCI TECHNOLOGIES, INC.
10401 HIGHLAND MANOR DRIVE, SUITE 120
TAMPA, FLORIDA 33610
PH: (813) 740-2300

W.W. BOLTON CERTIFICATE NO. 56537 STATE OF FLORIDA PROFESSIONAL ENGINEER

ARCHITECT/ENGINEERS:

BES DESIGN/BUILD

BES DESIGN/BUILD, LLC
766 Middle St, Fairhope, AL 36532
Phone: 251.990.5778 Fax: 251.990.3716

Drawing Title: TYPICAL DETAILS

Approved Project Director:

Project Title: CONSTRUCT VA OUTPATIENT CLINIC, PANAMA CITY

Project Number: 520-326

Building Number: -

Location: PANAMA CITY, FLORIDA

Date: APRIL 2013 | Checked: NB | Drawn: NB/KM

Drawing Number: SF202

Dwg. 8 of 17

Office of Construction and Facilities Management

Department of Veterans Affairs

VA FORM 08-6231