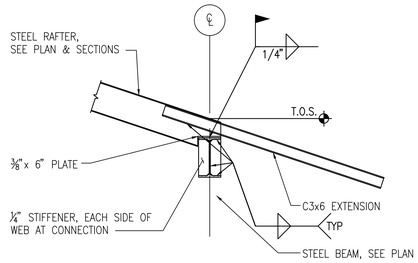

A TYPICAL RAFTER CONNECTION

SCALE: 3/4" = 1'-0"

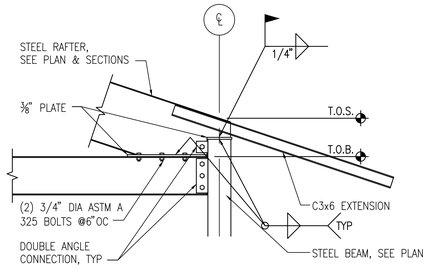

C TYPICAL CORNER CONNECTION

SCALE: 3/4" = 1'-0"

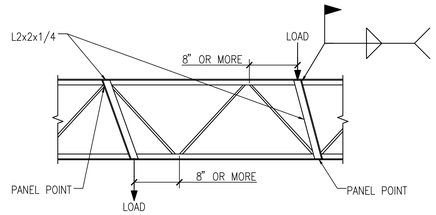

JOIST REINFORCMENT AS INDICATED IS REQUIRED FOR ALL CONCENTRATED LOADS 500lb OR MORE, OCCURRING OUTSIDE OF A PANEL POINT. LOADS INCLUDE, BUT ARE NOT LIMITED TO, MECHANICAL EQUIPMENT, PIPING, AND ROOF STRUCTURE SUPPORTS.

E TYPICAL JOIST REINFORCEMENT

SCALE: 3/4" = 1'-0"

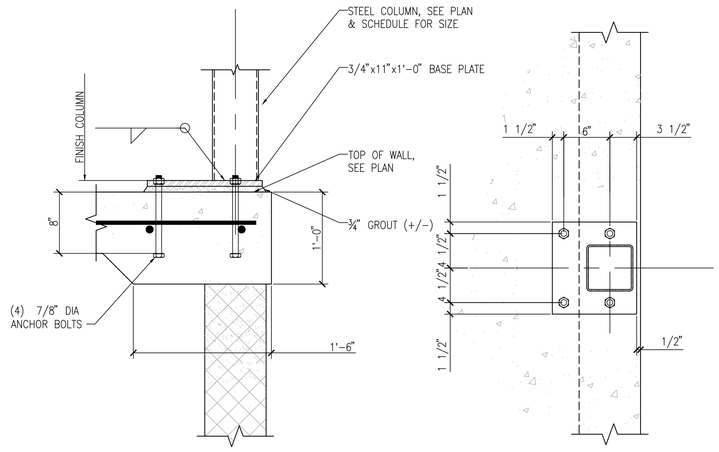

G TYPICAL COLUMN ON CMU WALL

SCALE: 1 1/2" = 1'-0"

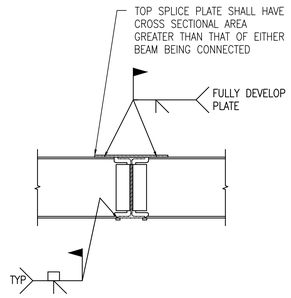

B TYPICAL BEAM TO BEAM MOMENT CONNECTION

SCALE: 3/4" = 1'-0"

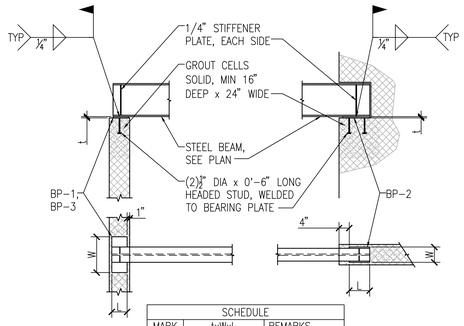

SCHEDULE		
MARK	txWxL	REMARKS
BP-1	1/2"x6"x0'-6"	--
BP-2	5/8"x6"x0'-8"	--
BP-3	3/4"x10"x0'-6"	--

D TYPICAL BEAM BEARING AT CMU

SCALE: 1/2" = 1'-0"

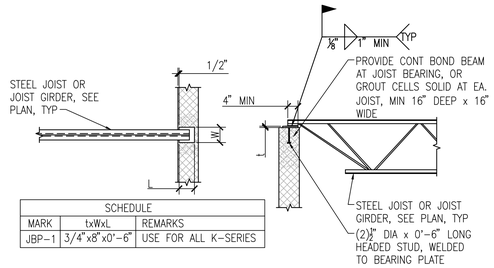

SCHEDULE		
MARK	txWxL	REMARKS
JBP-1	3/4"x8"x0'-6"	USE FOR ALL K-SERIES

F TYPICAL JOIST BEARING AT CMU WALL

SCALE: 1/2" = 1'-0"

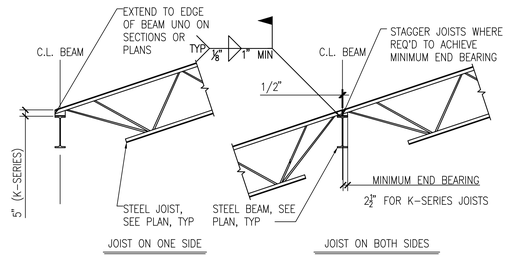

J TYPICAL JOIST BEARING AT STEEL BEAM

SCALE: 1/2" = 1'-0"

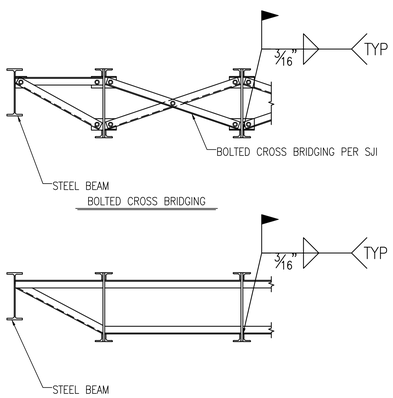

NOTES:
1. DO NOT WELD BRIDGING TO JOIST WEB MEMBERS.
2. DO NOT HANG MECHANICAL, ELECTRICAL, ETC. EQUIPMENT FROM BRIDGING.

H TYPICAL JOIST BRIDGING

SCALE: 3/4" = 1'-0"

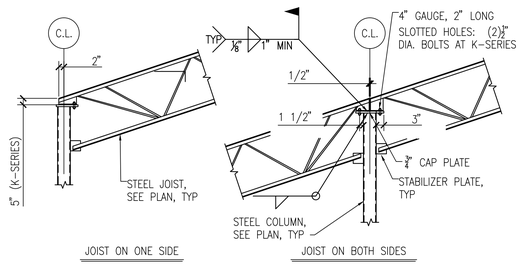

K TYPICAL JOIST BEARING AT ROOF COLUMN

SCALE: 1/2" = 1'-0"

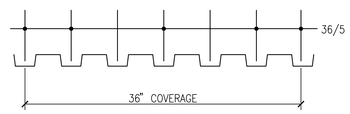

DECK PROPERTIES
TYPE: B
DEPTH: 1 1/2"
GAUGE: 22
t: 0.169 in^4
Sp: 0.186 in^3
Sn: 0.192 in^3

CONNECTION TYPE
PATTERN: 36/4
SUPPORT: 5/8" PUDDLE WELD
SIDE LAP: #10 TEK AT 30" OC, MAX

L TYPICAL METAL ROOF DECK

SCALE: 1 1/2" = 1'-0"

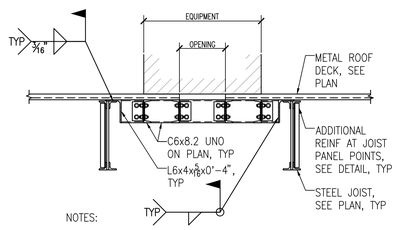

NOTES:

1. REFER TO ARCHITECTURAL, MECHANICAL, AND ELECTICAL DRAWINGS FOR ROOF TOP EQUIPMENT AND OPENING LOCATIONS. COORDINATE FRAMING DIMENSIONS WITH EQUIPMENT MANUFACTURERS.
2. ADDITIONAL FRAMING AROUND ROOF OPENINGS IS REQUIRED FOR ALL OPENINGS GREATER THAN 8"X8".

M TYPICAL FRAMING AT ROOF OPENINGS AND EQUIPMENT

SCALE: 3/4" = 1'-0"

FINAL SUBMISSION / FULLY SPRINKLERED

Revisions:	Date

CONSULTANTS:

CIVIL:
KENNETH HORNE & ASSOCIATES
7201 NORTH 9TH AVENUE, STE. 6
PENSACOLA, FLORIDA 32504
PH: (850) 471-9005
FX: (850) 471-0093

LANDSCAPE ARCHITECT:
CSA GROUP, INC.
6300 PICCADILLY SQUARE DRIVE
MOBILE, ALABAMA 36609
PH: (251) 344-4023
FX: (251) 344-4052

COMM/IDS:
SCHMIDT CONSULTING GROUP, INC.
40 S. PALAFOX PLACE, STE. 300
PENSACOLA, FLORIDA 32502
PH: (850) 438-0050
FX: (850) 432-8631

SURVEYORS:
KCI TECHNOLOGIES, INC.
10401 HIGHLAND MANOR DRIVE, SUITE 120
TAMPA, FLORIDA 33610
PH: (813) 740-2300

R.W. BOLTON CERTIFICATE NO. 56537 STATE OF FLORIDA PROFESSIONAL ENGINEER

ARCHITECT/ENGINEERS:

BES DESIGN/BUILD

BES DESIGN/BUILD, LLC
766 Middle St, Fairhope, AL 36532
Phone: 251.990.5778 Fax: 251.990.3716

Drawing Title: TYPICAL DETAILS

Approved: Project Director

Project Title: CONSTRUCT VA OUTPATIENT CLINIC, PANAMA CITY

Project Number: 520-326

Building Number: -

Location: PANAMA CITY, FLORIDA

Date: APRIL 2013 | Checked: NB | Drawn: NB/KM

Drawing Number: SF203

Dwg. 9 of 17

Office of Construction and Facilities Management

Department of Veterans Affairs

VA FORM 08-6231