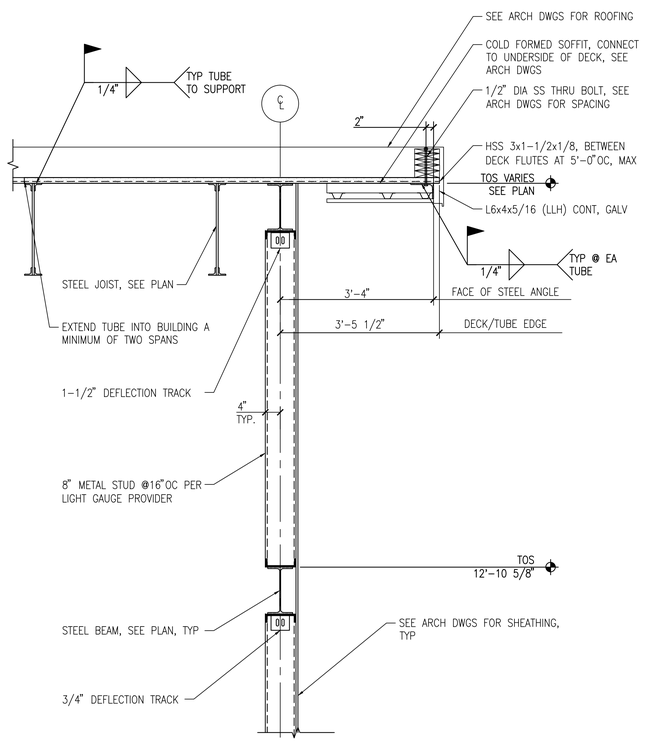

1 SF101 **ROOF SECTION AT EXTERIOR WALL**
SCALE: 3/4"=1'-0"

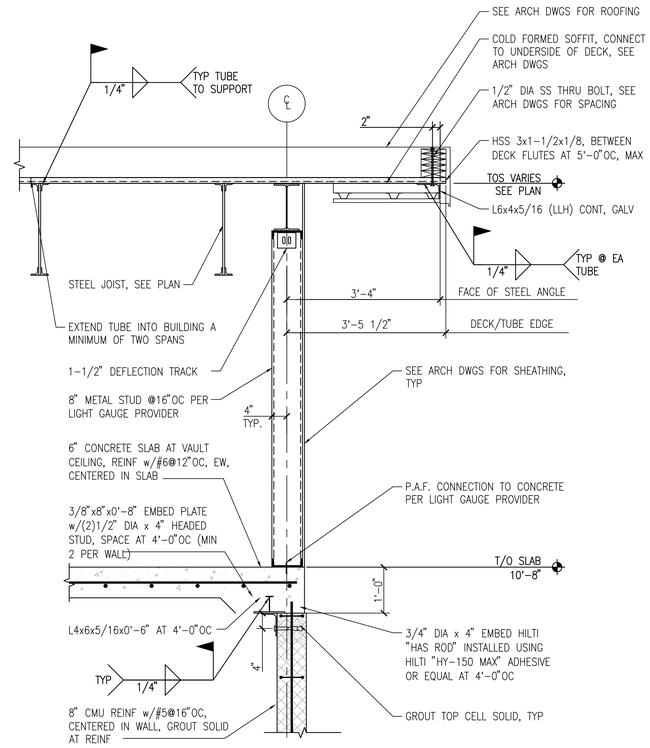

2 SF101 **ROOF SECTION AT VAULT WALL**
SCALE: 3/4"=1'-0"

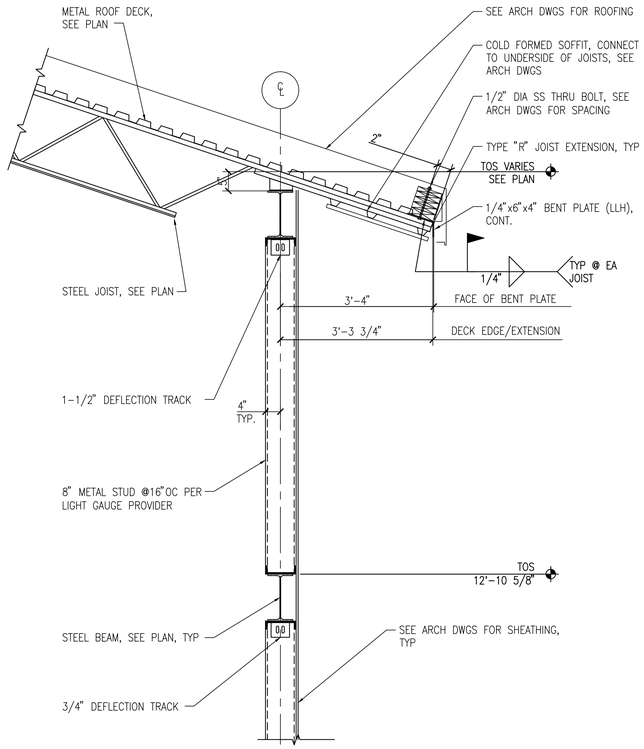

3 SF101 **ROOF SECTION AT EXTERIOR WALL**
SCALE: 3/4"=1'-0"

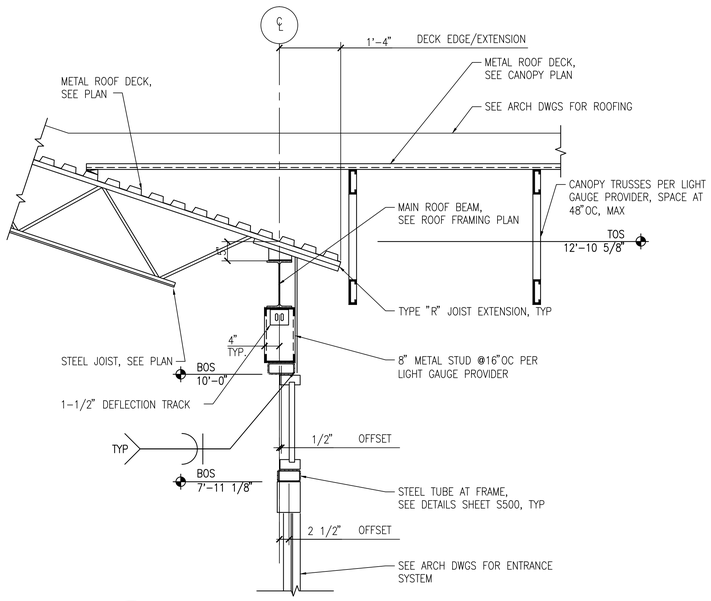

4 SF101 **ROOF SECTION AT ENTRANCE - FRAME #1**
SCALE: 3/4"=1'-0"

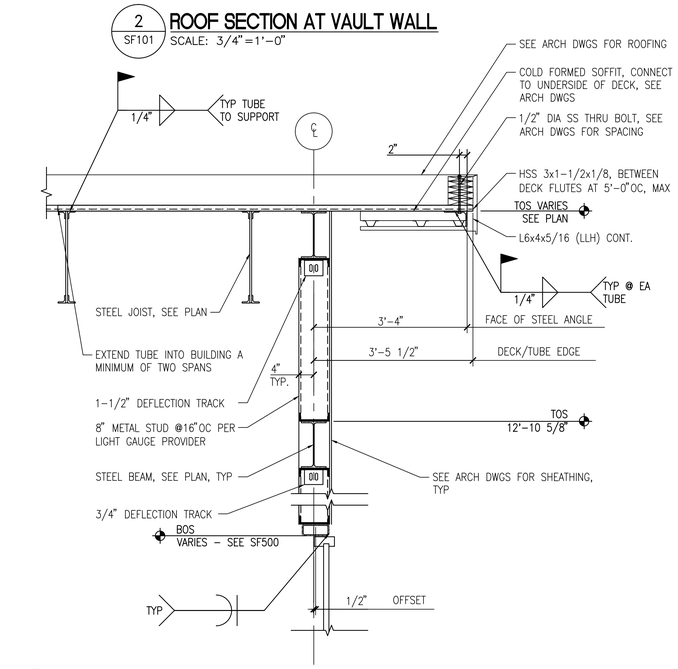

5 SF101 **ROOF SECTION AT EXTERIOR WALL - FRAMES #2, #3, #4, #6, #7, #8**
SCALE: 3/4"=1'-0"

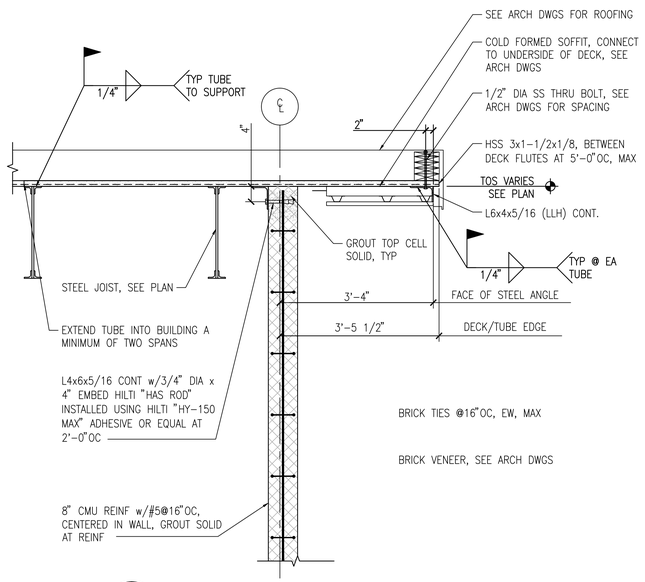

6 SF101 **ROOF SECTION AT CMU WALL**
SCALE: 3/4"=1'-0"

FINAL SUBMISSION / FULLY SPRINKLERED

Revisions:	Date

CONSULTANTS:

CIVIL:
KENNETH HORNE & ASSOCIATES
7201 NORTH 9TH AVENUE, STE. 6
PENSACOLA, FLORIDA 32504
PH: (850) 471-9005
FX: (850) 471-0093

LANDSCAPE ARCHITECT:
CSA GROUP, INC.
6300 PICCADILLY SQUARE DRIVE
MOBILE, ALABAMA 36609
PH: (251) 344-4023
FX: (251) 344-4052

COMM/IDS:
SCHMIDT CONSULTING GROUP, INC.
40 S. PALAFOX PLACE, STE. 300
PENSACOLA, FLORIDA 32502
PH: (850) 438-0050
FX: (850) 432-8631

SURVEYORS:
KCI TECHNOLOGIES, INC.
10401 HIGHLAND MANOR DRIVE, SUITE 120
TAMPA, FLORIDA 33610
PH: (813) 740-2300

W.N. BOLTON CERTIFICATE NO. 56537 STATE OF FLORIDA PROFESSIONAL ENGINEER

ARCHITECT/ENGINEERS:

BES DESIGN/BUILD

BES DESIGN/BUILD, LLC
766 Middle St, Fairhope, AL 36532
Phone: 251.990.5778 Fax: 251.990.3716

Drawing Title: ROOF FRAMING SECTIONS

Approved Project Director:

Project Title: CONSTRUCT VA OUTPATIENT CLINIC, PANAMA CITY

Location: PANAMA CITY, FLORIDA

Date: APRIL 2013 | Checked: NB | Drawn: NB/KM

Project Number: 520-326

Building Number: -

Drawing Number: SF401

Dwg. 12 of 17

Office of Construction and Facilities Management

Department of Veterans Affairs

VA FORM 08-6231