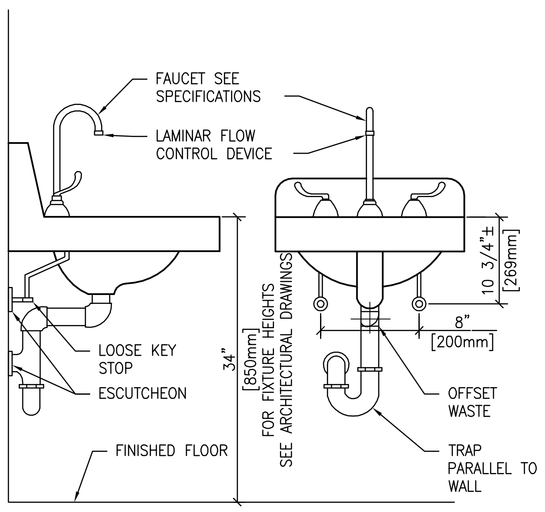


## 1 TYPICAL WHEELCHAIR LAVATORY DETAIL
SCALE: NONE

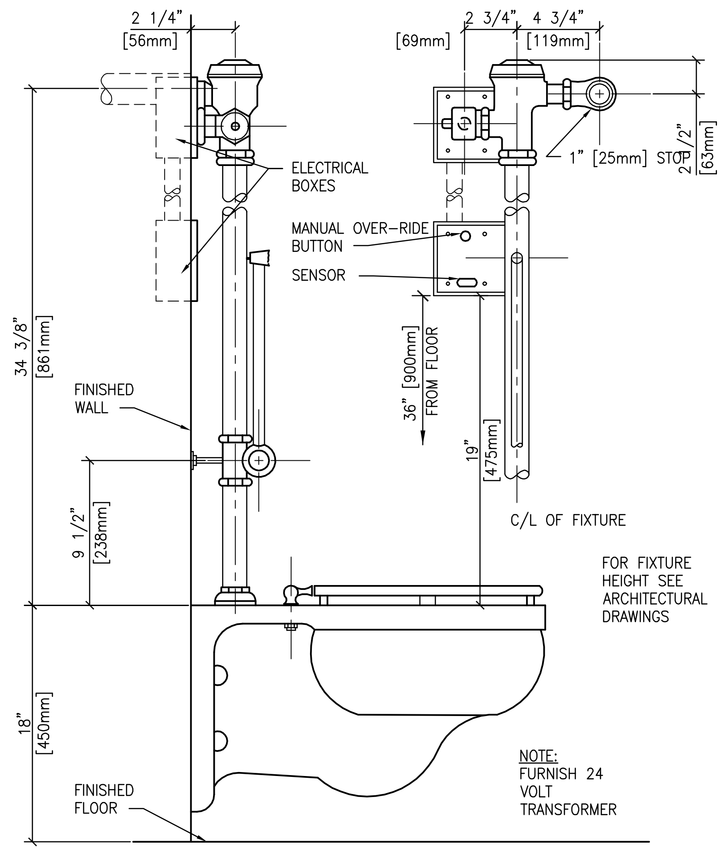


## 2 WATER CLOSET DETAIL - SENSOR OPERATED
SCALE: NONE

GALVANIZED STEEL LIQUID SEPERATOR TANKS WITH AUTO PUMP AND ELECTRIC SURGE CONTROL
(ALSO AVAILABLE WITH SOLENOID CONTROL)

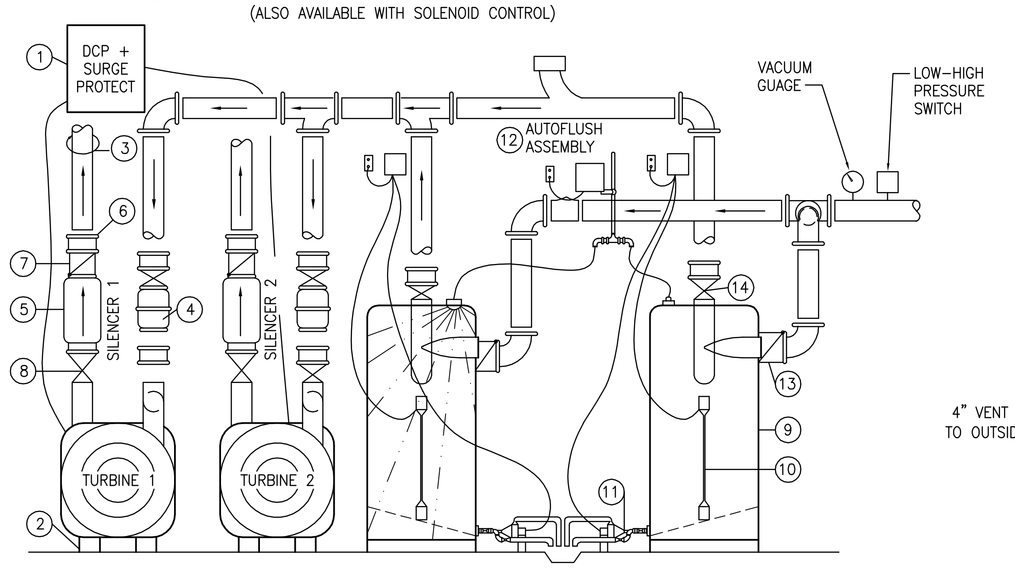


PARTS LIST

| ITEM NO. | PART NO. | DESCRIPTION |
|---|---|---|
| 1 | DCP | DUPLEX ELEC. MOTOR MOTOR CONTROL PANEL |
| 2 | AIP | ISOLATOR PAD |
| 3 | TET | TURBO EXHAUSTER |
| 4 | ASV | MECHANICAL ANTI-SURGE VALVE |
| 5 | AEX | AIR DISCHARGE SILENCER |
| 6 | RPL | FLEXIBLE PLUMBING ISOLATOR |
| 7 | ACV | DIRECTIONAL FLOW CHECK VALVE |

PARTS LIST

| ITEM NO. | PART NO. | DESCRIPTION |
|---|---|---|
| 8 | ABV | THROTTLING VALVE |
| 9 | SLG | CYCLONIC LIQUID SEPARATOR |
| 10 | FSA | ELECTRONIC LIQUID LEVEL SENSOR (OPT) |
| 11 | SV-300 | SOLENOID VALVE ELECTRONIC LIQUID LEVEL |
| 12 | AF-300 | SOLID STATE AUTO-FLUSH ASSEMBLY |
| 13 | ACV | CHECK VALVE |
| 14 | ACV | DIRECTIONAL FLOW VALVE |

## 3 ORAL EVACUATION SYSTEM PIPING DETAIL
SCALE: NONE

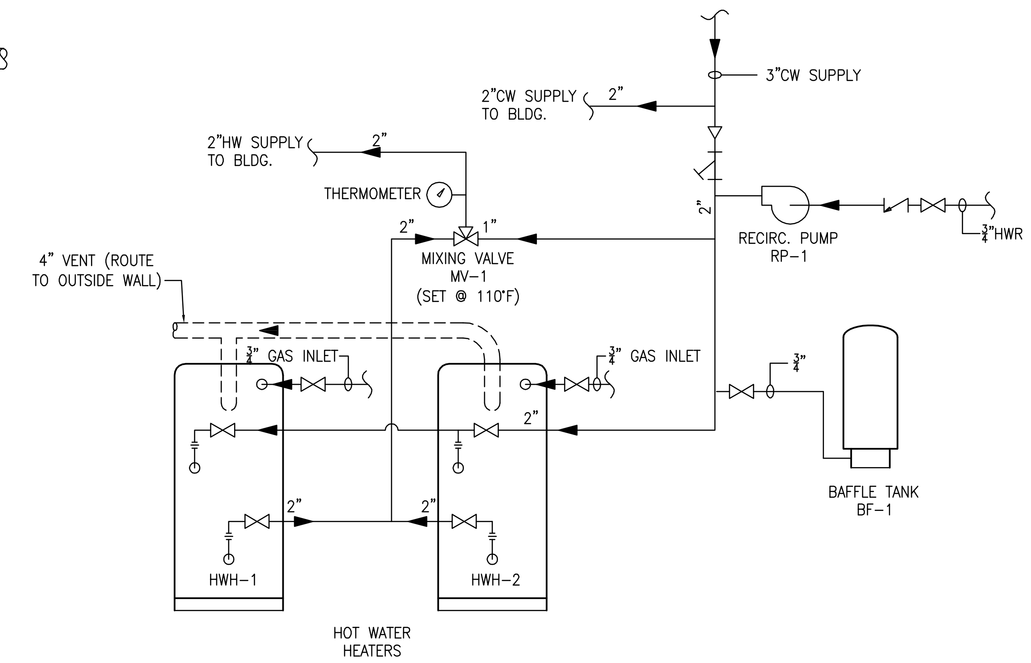


## 4 HOT WATER FLOW DIAGRAM
SCALE: NONE

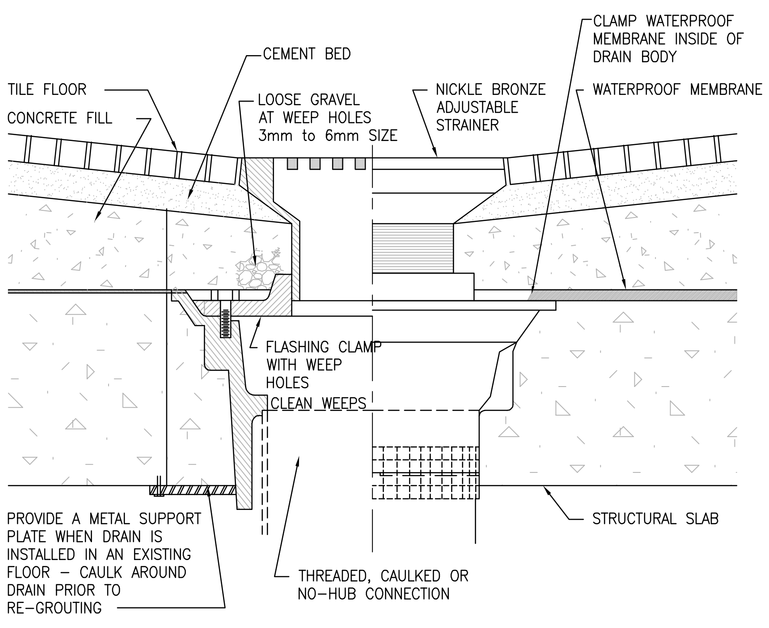


## 5 TYPE "C" FLOOR DRAIN DETAIL
SCALE: NONE

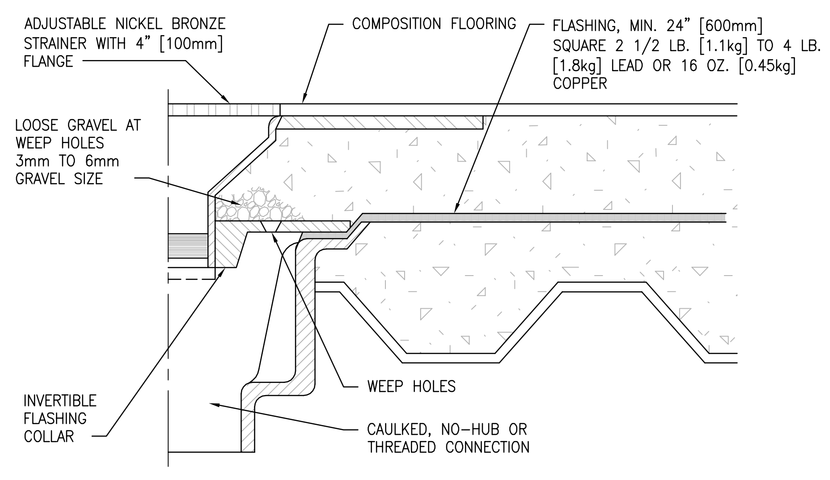


NOTE:

PROVIDE FLASHING WHEN DRAIN IS INSTALLED IN A NON MEMBRANE FLOOR

## 6 TYPE "D" FLOOR DRAIN DETAIL
SCALE: NONE

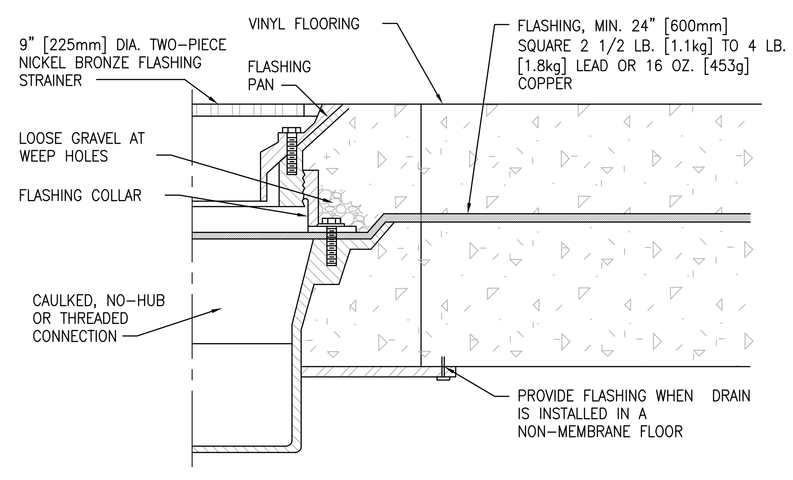


## 7 TYPE "F" FLOOR DRAIN DETAIL
SCALE: NONE

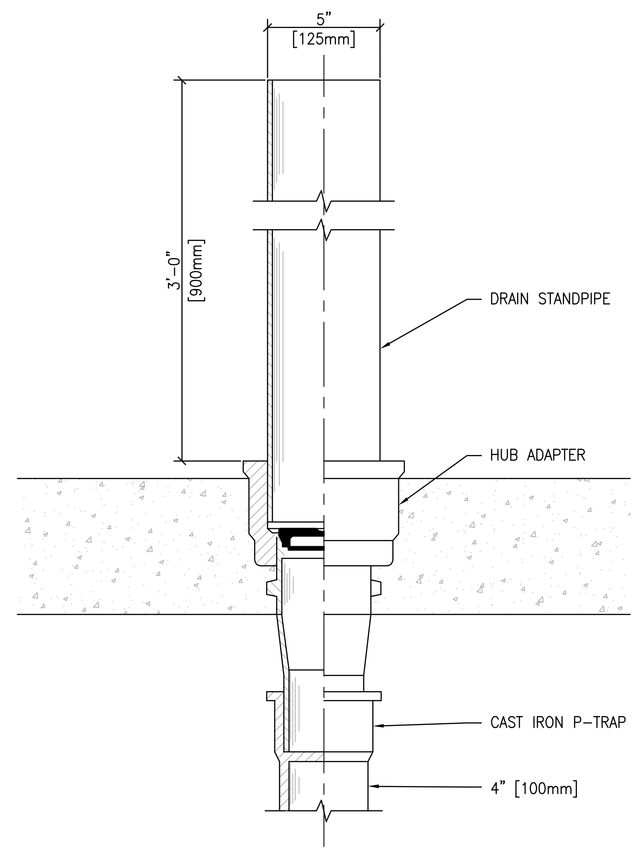


## 8 HUB DRAIN AND STANDPIPE
SCALE: NONE

FINAL SUBMISSION / FULLY SPRINKLERED

| Revisions | Date |
|---|---|
| | |

CONSULTANTS:

CIVIL:
KENNETH HORNE & ASSOCIATES
7201 NORTH 9TH AVENUE, STE. 6
PENSACOLA, FLORIDA 32504
PH: (850) 471-9005
FX: (850) 471-0093

LANDSCAPE ARCHITECT:
CSA GROUP, INC.
6300 PICCADILLY SQUARE DRIVE
MOBILE, ALABAMA 36609
PH: (251) 344-4023
FX: (251) 344-4052

COMM/IDS:
SCHMIDT CONSULTING GROUP, INC.
40 S. PALAFOX PLACE, STE. 300
PENSACOLA, FLORIDA 32502
PH: (850) 438-0050
FX: (850) 432-8631

SURVEYORS:
KCI TECHNOLOGIES, INC.
10401 HIGHLAND MANOR DRIVE, SUITE 120
TAMPA, FLORIDA 33610
PH: (813) 740-2300

R.W. BOLYEN CERTIFICATE NO. 56537 STATE OF FLORIDA PROFESSIONAL ENGINEER

ARCHITECT/ENGINEERS:

BES DESIGN/BUILD

BES DESIGN/BUILD, LLC
766 Middle St, Fairhope, AL 36532
Phone: 251.990.5778 Fax: 251.990.3716

Drawing Title: PLUMBING DETAILS

Approved: Project Director

Project Title: CONSTRUCT VA OUTPATIENT CLINIC, PANAMA CITY

Location: PANAMA CITY, FLORIDA

Date: APRIL 2013 | Checked: WWB | Drawn: JLL

Project Number: 520-326

Building Number: –

Drawing Number: PL501

Dwg. 12 of 16

Office of Construction and Facilities Management

Department of Veterans Affairs

VA FORM 08-6231