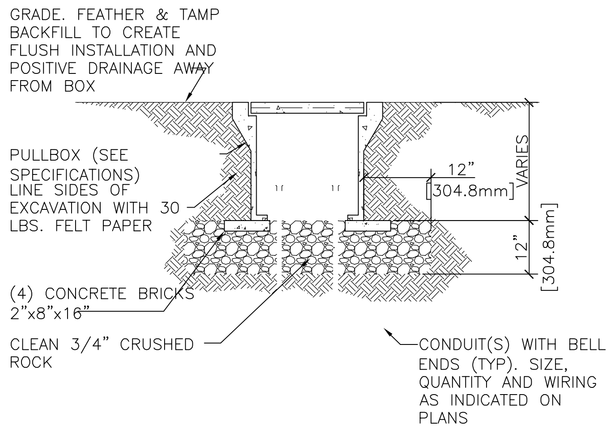

1 UNDERGROUND CONCRETE PULLBOX

SCALE: NONE — INSTALLATION IN TURF AREAS

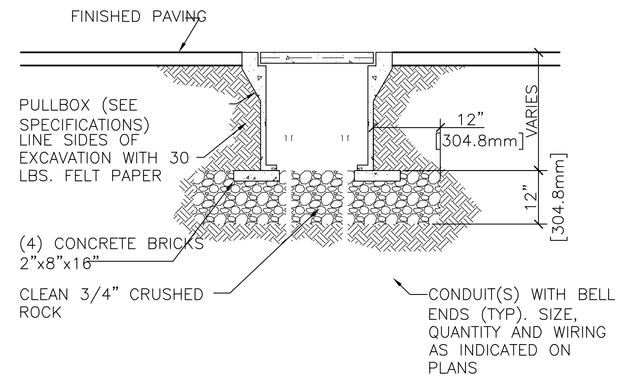

2 UNDERGROUND CONCRETE PULLBOX

SCALE: NONE — INSTALLATION IN PAVED AREAS

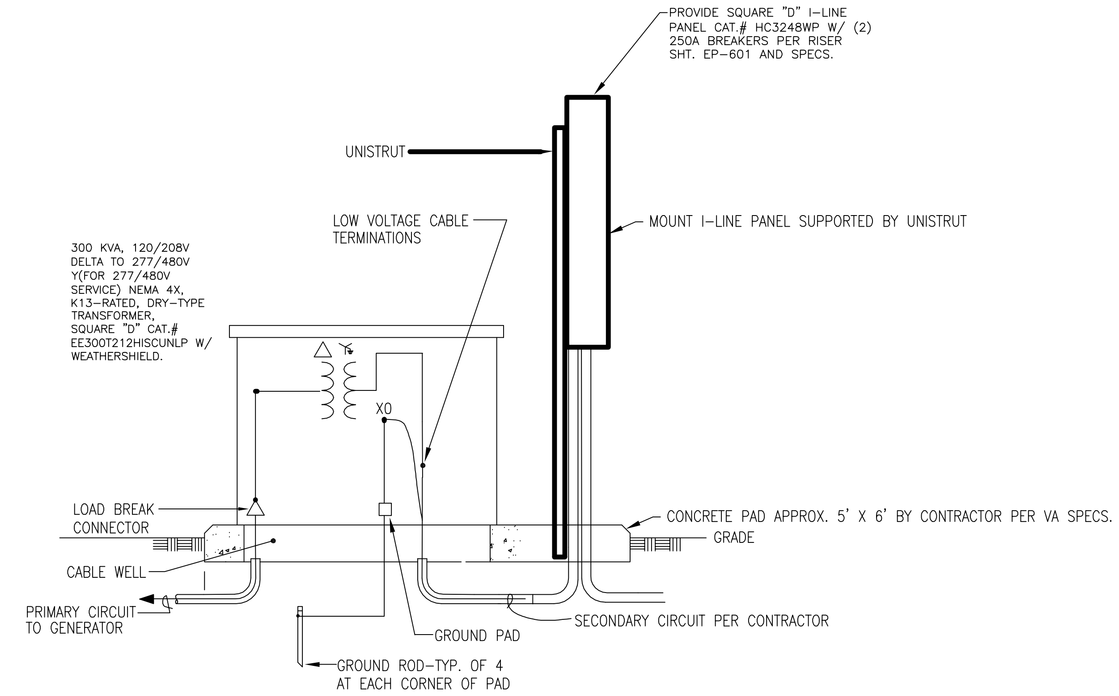

9 DRY TYPE PAD-MOUNTED STEP-UP TRANSFORMER DETAIL

NTS

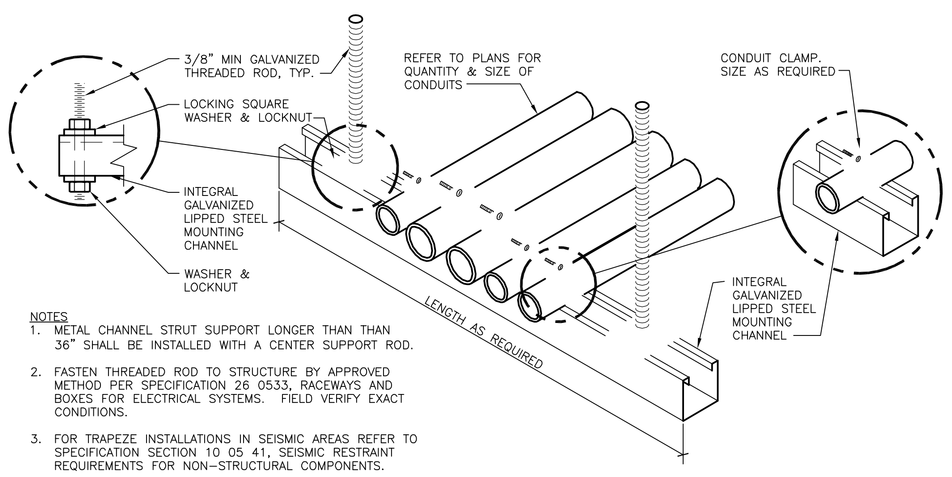

NOTES

1. METAL CHANNEL STRUT SUPPORT LONGER THAN THAN 36" SHALL BE INSTALLED WITH A CENTER SUPPORT ROD.
2. FASTEN THREADED ROD TO STRUCTURE BY APPROVED METHOD PER SPECIFICATION 26 0533, RACEWAYS AND BOXES FOR ELECTRICAL SYSTEMS. FIELD VERIFY EXACT CONDITIONS.
3. FOR TRAPEZE INSTALLATIONS IN SEISMIC AREAS REFER TO SPECIFICATION SECTION 10 05 41, SEISMIC RESTRAINT REQUIREMENTS FOR NON-STRUCTURAL COMPONENTS.

4 CONDUIT TRAPEZE MOUNTING DETAIL

NTS

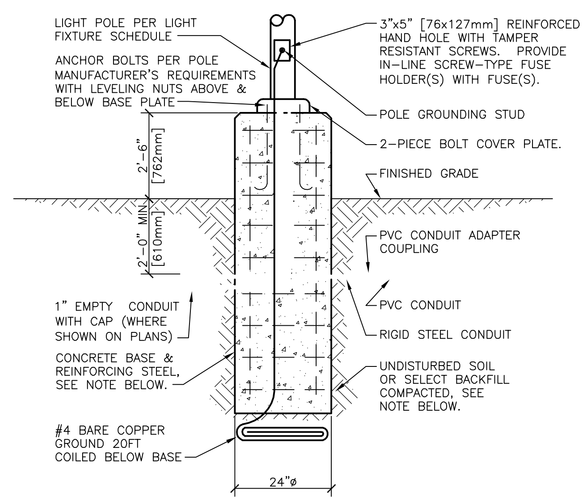

NOTE:

BACKFILL, CONCRETE, REINFORCING STEEL, AND ANCHOR BOLTS ARE SHOWN FOR REFERENCE ONLY. STRUCTURAL DESIGN IS SHOWN ON STRUCTURAL DRAWINGS.

3 POLE BASE DETAIL

NTS

FINAL SUBMISSION / FULLY SPRINKLERED

Revisions	Date

CONSULTANTS:

CIVIL:
KENNETH HORNE & ASSOCIATES
7201 NORTH 9TH AVENUE, STE. 6
PENSACOLA, FLORIDA 32504
PH: (850) 471-9005
FX: (850) 471-0093

LANDSCAPE ARCHITECT:
CSA GROUP, INC.
6300 PICCADILLY SQUARE DRIVE
MOBILE, ALABAMA 36609
PH: (251) 344-4023
FX: (251) 344-4052

COMM/IDS:
SCHMIDT CONSULTING GROUP, INC.
40 S. PALAFOX PLACE, STE. 300
PENSACOLA, FLORIDA 32502
PH: (850) 438-0050
FX: (850) 432-8631

SURVEYORS:
KCI TECHNOLOGIES, INC.
10401 HIGHLAND MANOR DRIVE, SUITE 120
TAMPA, FLORIDA 33610
PH: (813) 740-2300

R.W. BOLTON CERTIFICATE NO. 56537 STATE OF FLORIDA PROFESSIONAL ENGINEER

ARCHITECT/ENGINEERS:

BES DESIGN/BUILD

BES DESIGN/BUILD, LLC
766 Middle St, Fairhope, AL 36532
Phone: 251.990.5778 Fax: 251.990.3716

Drawing Title: ELECTRICAL DETAILS

Approved: Project Director

Project Title: CONSTRUCT VA OUTPATIENT CLINIC, PANAMA CITY

Location: PANAMA CITY, FLORIDA

Date: APRIL 2013 | Checked: KDE | Drawn: GWS

Project Number: 520-326

Building Number: -

Drawing Number: EP300

Dwg. 13 of 19

Office of Construction and Facilities Management

Department of Veterans Affairs

VA FORM 08-6231