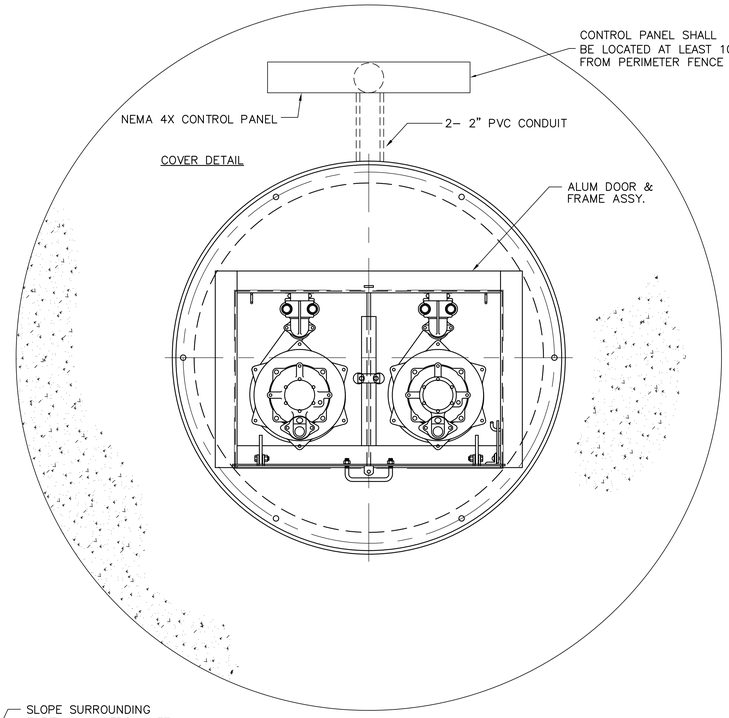

NOTE:
CONTROL PANEL SHALL BE MOUNTED IN A NEMA 4X ENCLOSURE AND SHALL INCLUDE: LOCK HASP, CIRCUIT BREAKERS FOR EACH PUMP, ALTERNATING RELAY, HOA SWITCHES AND RUN LIGHTS FOR EACH PUMP, TERMINAL STRIP FOR CONNECTING PUMP AND CONTROL WIRES, TRANSFORMER TO PROVIDE 24 VOLT CONTROL CIRCUIT, SURGE/LIGHTNING PROTECTION, GENERATOR RECEPTACLE AND REQUIRED TO HAVE VISUAL AND AUDIBLE ALARM FOR HIGH LEVEL CONDITION. ELECTRICAL COMPONENTS INSIDE WETWELL SHALL COMPLY WITH NEC REQUIREMENTS FOR CLASS I GROUP D, DIVISION 1. EACH FLEXIBLE POWER CABLE SHALL BE PROVIDED WITH WATER TIGHT SEAL AND STRAIN RELIEF. ATTACH A DURABLE WEATHER RESISTANT SIGN VSIBLE TO THE PUBLIC IDENTIFYING EMERGENCY CONTACT PERSON AND PHONE NUMBER. PROVIDE 1" WATER SERVICE WITH RPZ BACKFLOW PREVENTOR AND HOSE BIBB. INSULATE ALL ABOVE GROUND COMPONENTS.

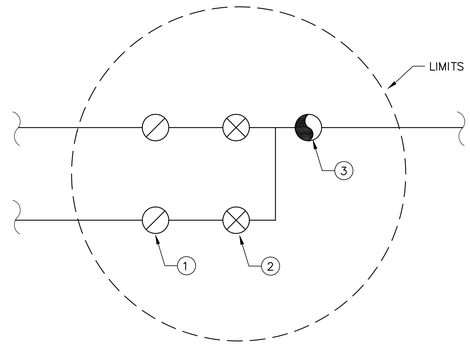

1 – 2" CHECK VALVE
2 – 2" GATE VALVE
3 – AUX. PUMP–OUT CONNECTION (SEE SECTION)

NOTE: ALL PIPING FROM PUMP TO OUTSIDE OF VALVE BOX TO BE STAINLESS STEEL.

PLUMBING SCHEMATIC
N.T.S.

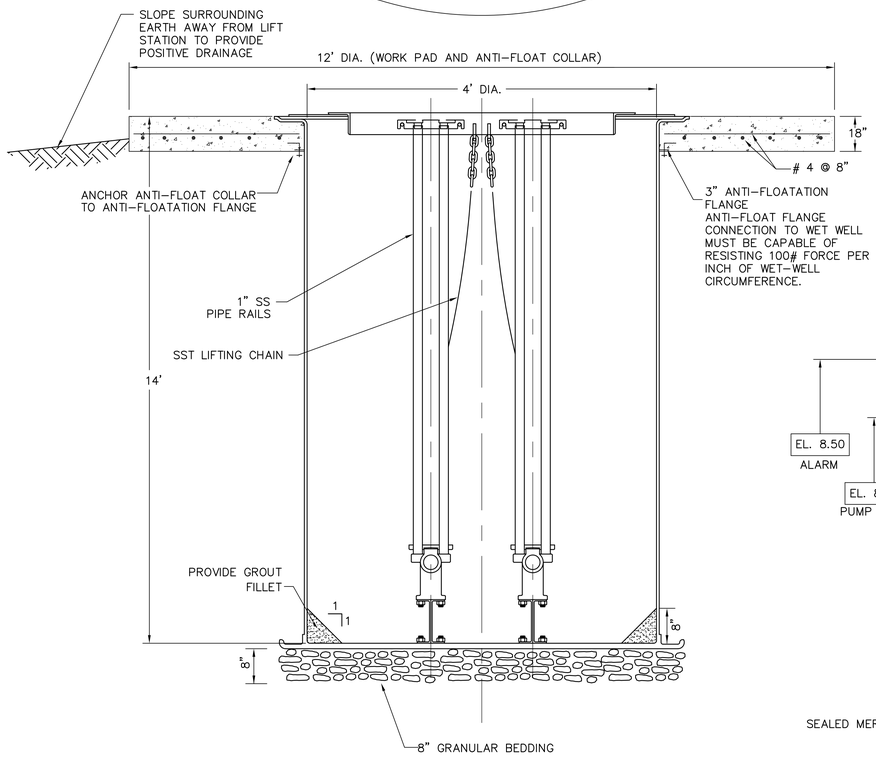

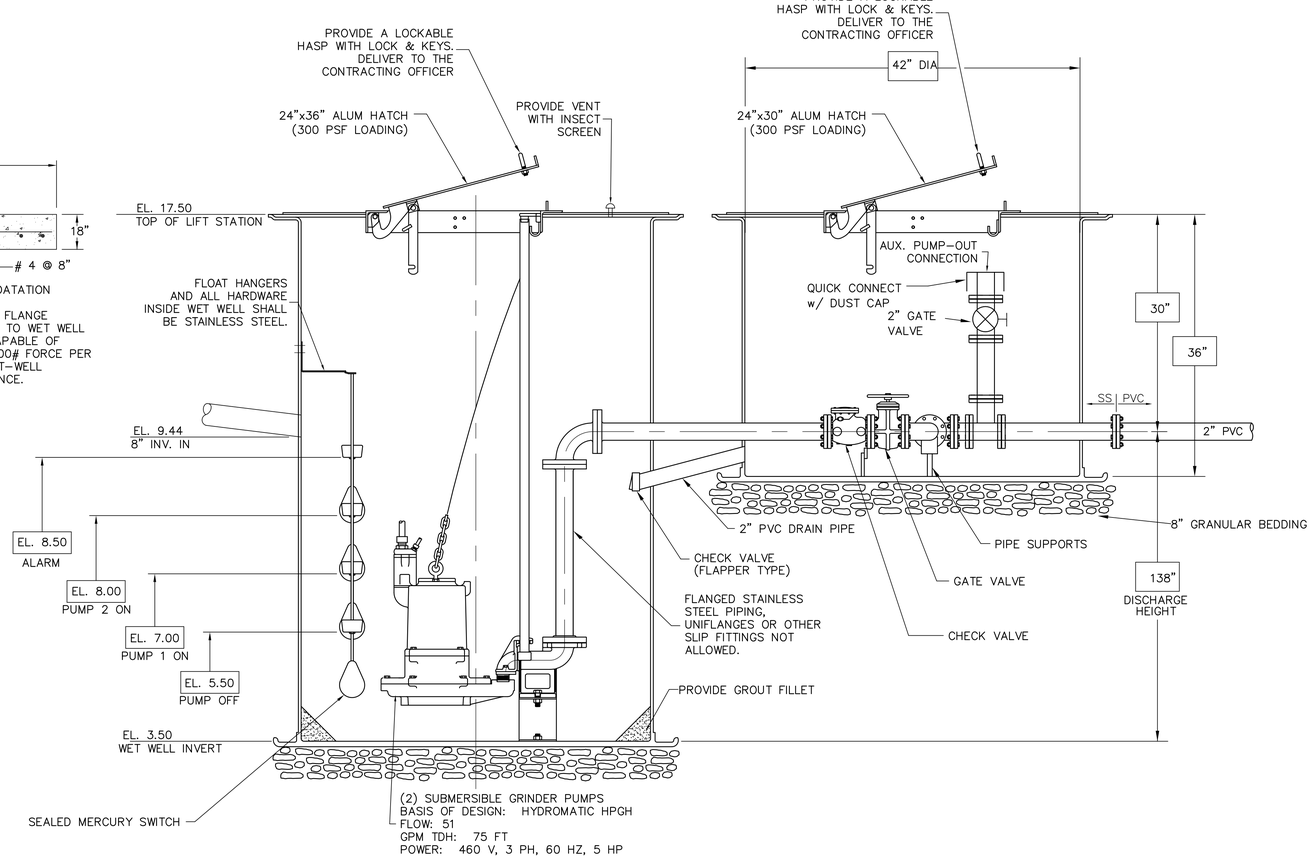

A1 / CU101 LIFT STATION DETAIL, DUPLEX INSTALLATION, FIBERGLASS SUMP W/ALUMINUM COVER
N.T.S.

FINAL SUBMISSION / FULLY SPRINKLERED

Revisions	Date

CONSULTANTS:

CIVIL:
KENNETH HORNE & ASSOCIATES
7201 NORTH 9TH AVENUE, STE. 6
PENSACOLA, FLORIDA 32504
PH: (850) 471–9005
FX: (850) 471–0093

COMM/IDS:
SCHMIDT CONSULTING GROUP, INC.
40 S. PALAFOX PLACE, STE. 300
PENSACOLA, FLORIDA 32502
PH: (850) 438–0050
FX: (850) 432–8631

LANDSCAPE ARCHITECT:
CSA GROUP, INC.
6300 PICCADILLY SQUARE DRIVE
MOBILE, ALABAMA 36609
PH: (251) 344–4023
FX: (251) 344–4052

SURVEYORS:
KCI TECHNOLOGIES, INC.
10401 HIGHLAND MANOR DRIVE, SUITE 120
TAMPA, FLORIDA 33610
PH: (813) 740–2300

KENNETH C. HORNE LICENSE No. 40149 3/28/13 STATE OF FLORIDA PROFESSIONAL ENGINEER
KHA FL. CERT. #8268

ARCHITECT/ENGINEERS:

BES DESIGN/BUILD
BES DESIGN/BUILD, LLC
766 Middle St, Fairhope, AL 36532
Phone: 251.990.5778 Fax: 251.990.3716

Drawing Title: LIFT STATION DETAILS
Approved Project Director:
Project Title: PANAMA CITY OUTPATIENT CLINIC VA GULF COAST HEALTH CARE
Location: PANAMA CITY, FLORIDA
Date: MARCH 2013 | Checked: KCH | Drawn: LRR
Project Number: 520-326
Building Number: –
Drawing Number: CU503
Dwg. 15 of 21

Office of Construction and Facilities Management
Department of Veterans Affairs

VA FORM 08–6231