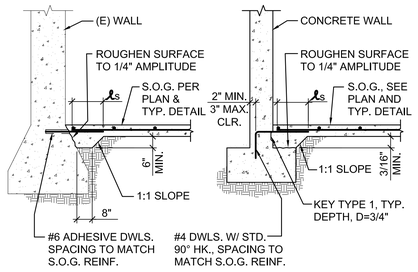

SLAB ON GRADE TO EXISTING WALL

SLAB ON GRADE TO NEW WALL

10 S.O.G. TO WALL CONNECTION

N.T.S.

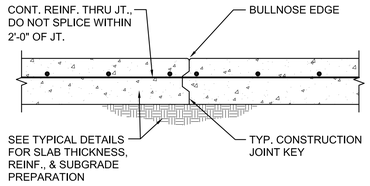

NOTE:

CONSTRUCTION JOINTS TO BE USED ONLY WHERE SHOWN ON PLAN OR SPECIFICALLY APPROVED BY THE OWNER'S REPRESENTATIVE.

7 SLAB ON GRADE CONSTRUCTION JOINT

N.T.S.

CONCRETE REINFORCING DEVELOPMENT & SPLICE LENGTHS

BAR LOCATION	CONCRETE TYPE	CONCRETE STRENGTH	BAR SIZE #3 ld	#3 ls	#3 ldh	#4 ld	#4 ls	#4 ldh	#5 ld	#5 ls	#5 ldh	#6 ld	#6 ls	#6 ldh	#7 ld	#7 ls	#7 ldh	#8 ld	#8 ls	#8 ldh	#9 ld	#9 ls	#9 ldh	#10 ld	#10 ls	#10 ldh	#11 ld	#11 ls	#11 ldh	#14 ld	#14 ldh	#18 ld	#18 ldh
CONC. WALL VERT. REINF., COLUMNS, BEAM BOT. REINF. SLAB ON GRADE FOOTING BOT. REINF.	NWC	f'c ≥ 4ksi	14	18	7	19	25	10	24	31	12	28	37	14	42	54	17	47	62	19	54	70	21	60	78	24	67	87	27	80	32	107	43
CONC. WALL HORIZ. REINF., FTG. TOP & SIDE REINF., BEAM TOP & SIDE REINF.	NWC	f'c ≥ 4ksi	18	24	7	25	32	10	31	40	12	37	48	14	54	70	17	62	80	19	70	90	21	78	102	24	87	113	27	104	32	139	43
FILL ON METAL DECK	LWC	f'c ≥ 4ksi	18	24	9	25	32	13	31	40	16	37	48	18	54	70	22	62	80	25	70	90	27	78	102	31	87	113	35	104	42	139	56

NOTES:

1. ld = DEVELOPMENT LENGTH

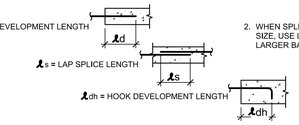

2. WHEN SPLICING BARS OF DIFFERENT SIZE, USE LAP SPLICE LENGTH OF LARGER BAR, U.O.N.

3. STAGGER SPLICES AS INDICATED ON DRAWINGS.

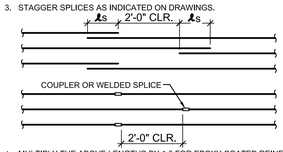

4. MULTIPLY THE ABOVE LENGTHS BY 1.5 FOR EPOXY COATED REINF.

4 REINF. DEV. & SPLICE LENGTHS

N.T.S.

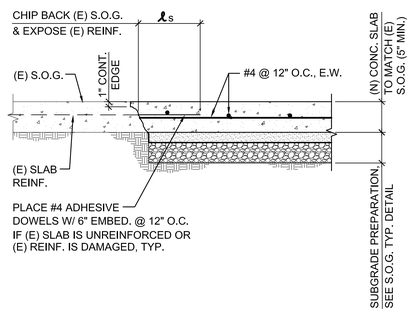

11 NEW SLAB ON GRADE TO EXISTING SLAB ON GRADE

N.T.S.

STD HOOKS & BENDS

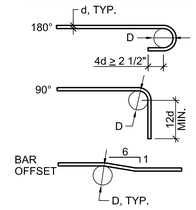

STIRRUPS, TIES & HOOPS

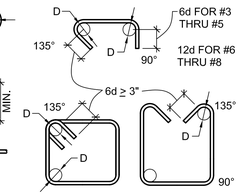

NOTE:

1. DO NOT FIELD BEND REINFORCEMENT PARTIALLY EMBEDDED IN CONCRETE.

BEND DIAMETER, D

BAR SIZE	STD HOOKS & BENDS	STIRRUPS, TIES & HOOPS
#3 THRU #5	6d	4d
#6 THRU #8	6d	6d
#9 THRU #11	8d	NA
#14 THRU #18	10d	NA

5 HOOKS & BENDS

N.T.S.

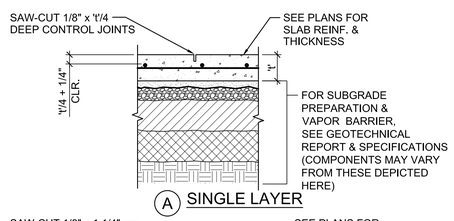

A SINGLE LAYER

B DOUBLE LAYER

12 SLAB ON GRADE CONTOL JT. & SUBGRADE PREPARATION

N.T.S.

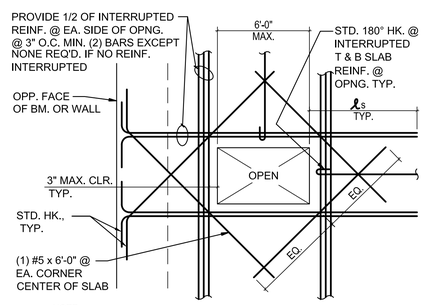

NOTE:

1. AT EDGE OF SLAB LOCATIONS, HOOK REINF. INTO OPPOSITE FACE OF WALL OR BEAM.

9 TYPICAL CONC. FLOOR OPENINGS

N.T.S.

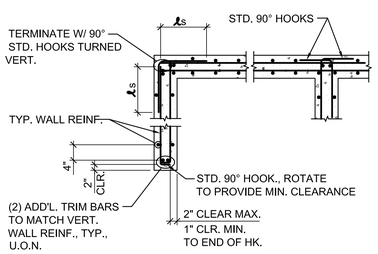

A DOUBLE CURTAIN REINF. AT WALL

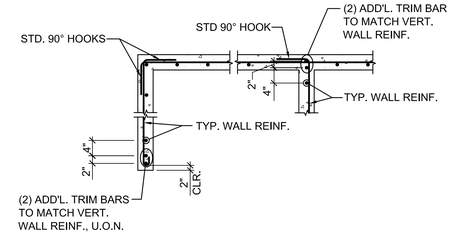

B SINGLE CURTAIN REINF. AT WALL

6 WALL REINF. @ CORNERS & JOINTS

N.T.S.

Revisions	Date
2	7/25/13
1	7/22/13

CONSULTANTS:

Degenkolb

DEGENKOLB ENGINEERS
235 Montgomery Street, Suite 500
San Francisco, CA 94104
415.392.6952 *Phone*
415.544.0782 *Fax*
www.degenkolb.com
B0584020.00

REGISTERED PROFESSIONAL ENGINEER ROBERT M. FRANK No. S-5113 Exp. 6/30/15 STRUCTURAL STATE OF CALIFORNIA

ARCHITECT/ENGINEERS:

HMC Architects

1827 E. Fir Avenue, Studio 103 / Fresno, CA 93720
T 559 322 2444 / www.hmcarchitects.com

LICENSED ARCHITECT REX A. GRIFFITH No. C-24897 REN. 07-31-15 STATE OF CALIFORNIA

Drawing Title: TYPICAL CONCRETE DETAILS

Approved: Project Director

Project Title: BUILDING 24 SEISMIC CORRECTION AND ADDITION

Location: VAMC FRESNO, CA

Date: March 12, 2013 | Checked: WG | Drawn: MAM/KM

Project Number: 570-215

Building Number: 24

Drawing Number: SS101

Dwg. 6 of 176

Office of Construction and Facilities Management

Department of Veterans Affairs

VA FORM 08-6231