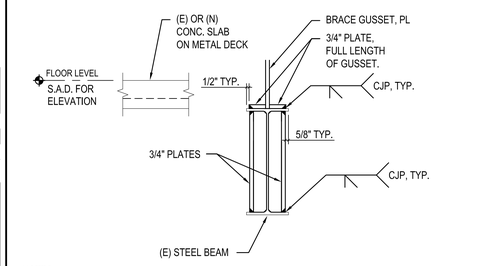

NOTES:

1. FOR BEAMS AT ROOF LEVEL, 3/4" PLATES ADJACENT TO GUSSET WILL BE LOCATED ON UNDERSIDE OF BM. BOT. FLANGE.

13 (E) STL BM STRENGTHENING

1" = 1'-0"

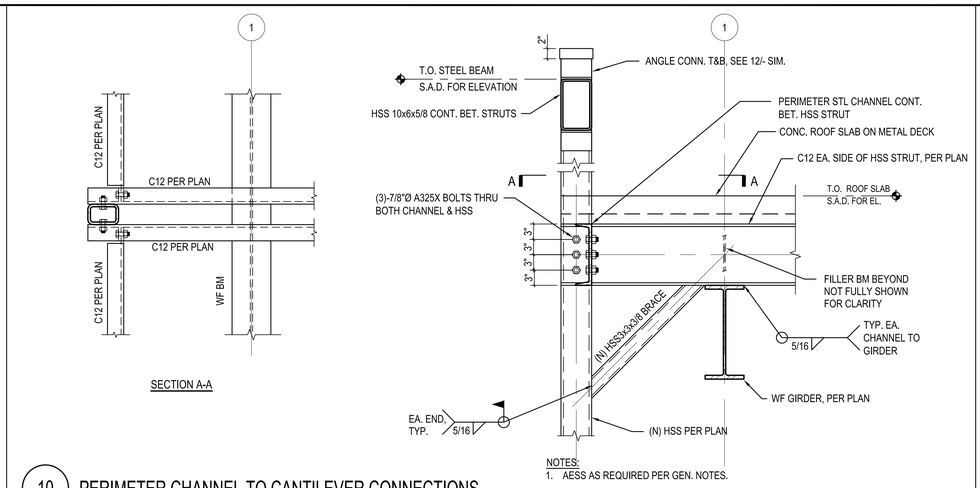

NOTES:

1. AESS AS REQUIRED PER GEN. NOTES.

10 PERIMETER CHANNEL TO CANTILEVER CONNECTIONS

N.T.S. DEDUCT ALT. #7

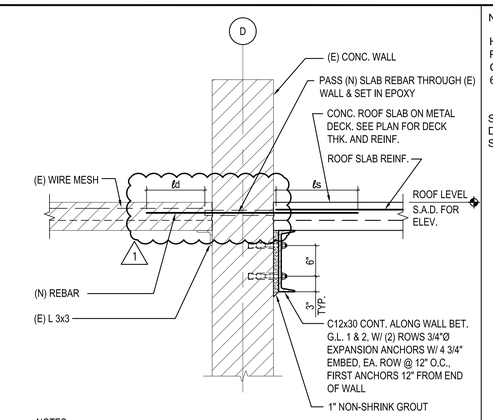

NOTES:

1. LOCATE (E) WALL REBAR PRIOR TO INSTALLING (N) EXPANSION ANCHORS. DO NOT CUT (E) REBAR

4 (N) ROOF SLAB AT (E) CONC. WALL - LOOKING NORTH

N.T.S.

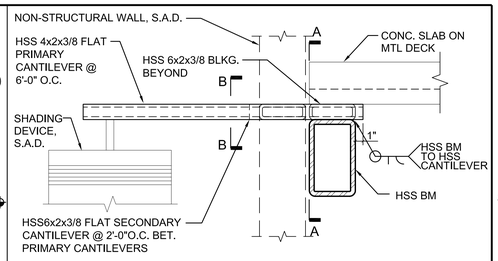

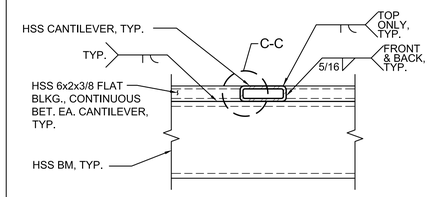

SECTION A-A

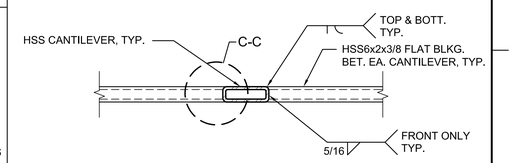

SECTION B-B

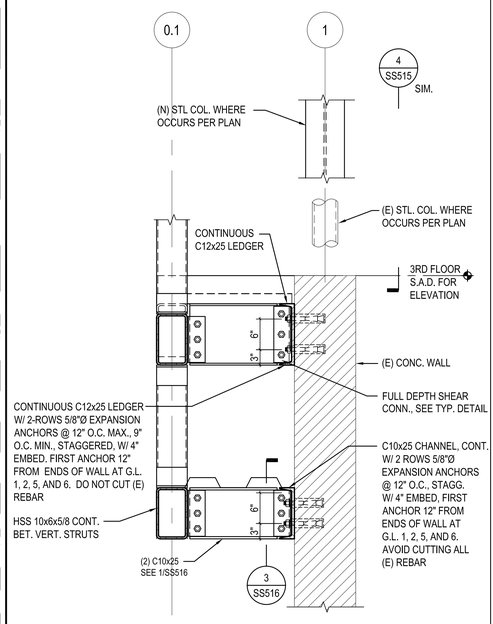

NOTES:

1. SEE 12/- FOR ALL INFO NOT SHOWN, SIMILAR.

15 ARCHITECTURAL WALL SUPPORT

N.T.S.

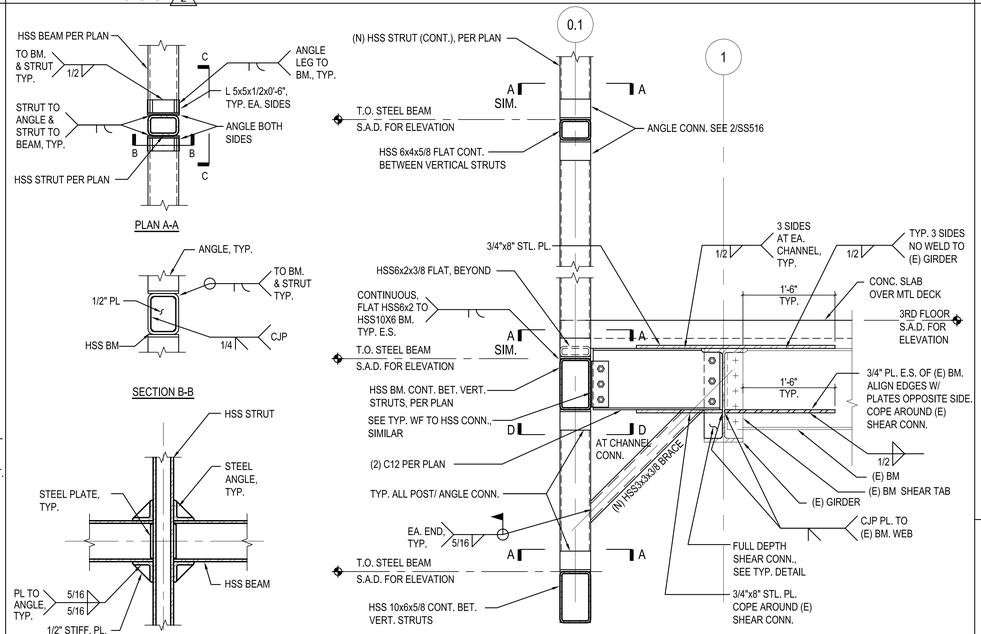

NOTES:

1. SEE 12/SS515 FOR ALL INFO NOT SHOWN.
2. AESS AS REQUIRED PER GEN. NOTES.

12 ARCHITECTURAL WALL SUPPORT

N.T.S.

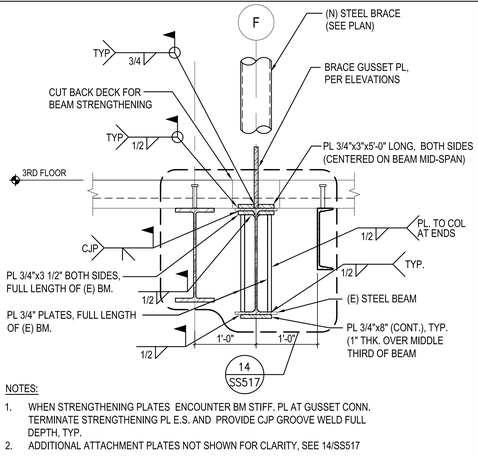

NOTES:

1. WHEN STRENGTHENING PLATES ENCOUNTER BM STIFF. PL AT GUSSET CONN. TERMINATE STRENGTHENING PL E.S. AND PROVIDE CJP GROOVE WELD FULL DEPTH, TYP.
2. ADDITIONAL ATTACHMENT PLATES NOT SHOWN FOR CLARITY, SEE 14/SS517

5 (E) STL BM STRENGTHENING AT 3RD FLR. GL '3' TO '4'

1" = 1'-0"

SECTION C-C

NOTE:
DEDUCT ALT. #5 BELOW LEVEL 3
DEDUCT ALT. #7 @ LEVEL 3 AND ABOVE LEVEL 3

2 CANTILEVER CONNECTION

N.T.S. DEDUCT ALT. #5 AND #7

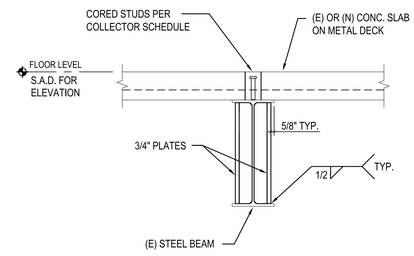

NOTES:

1. SEE 5/SS531 FOR COLLECTOR SCHEDULE.

6 (E) STL BM STRENGTHENING

1" = 1'-0"

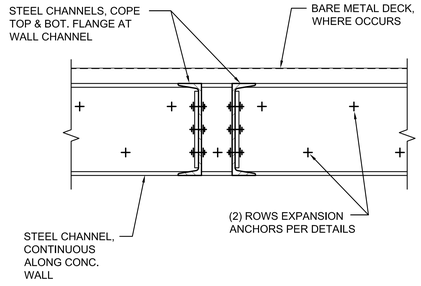

3 CHANNEL SUPPORT AT CONC. WALL

N.T.S.

Revisions	Date
2	7/25/13
1	7/22/13

CONSULTANTS:

Degenkolb

DEGENKOLB ENGINEERS
235 Montgomery Street, Suite 500
San Francisco, CA 94104
415.392.6952 Phone
415.544.0782 Fax
www.degenkolb.com
B0584020.00

REGISTERED PROFESSIONAL ENGINEER ALBERT M. GRAY No. 5113 Exp. 6/30/15 STRUCTURAL STATE OF CALIFORNIA

ARCHITECT/ENGINEERS:

HMC Architects
1827 E. Fir Avenue, Studio 103 / Fresno, CA 93720
T 559 322 2444 / www.hmcarchitects.com

LICENSED ARCHITECT STEVEN M. GRAFF No. C-24897 REN. 07-31-15 STATE OF CALIFORNIA

Drawing Title: STEEL DETAILS

Approved: Project Director

Project Title: BUILDING 24 SEISMIC CORRECTION AND ADDITION

Location: VAMC FRESNO, CA

Date: March 12, 2013 | Checked: WG | Drawn: MAM/KM

Project Number: 570-215

Building Number: 24

Drawing Number: SS516

Dwg. 29 of 176

Office of Construction and Facilities Management

Department of Veterans Affairs

VA FORM 08-6231