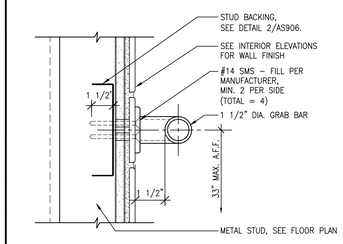

9 GRAB BAR ANCHORAGE
3" = 1'-0"

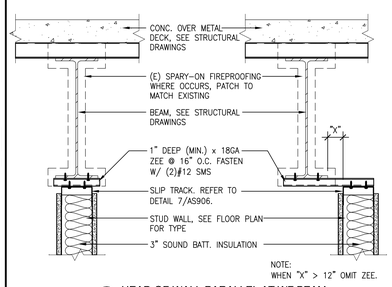

8 HEAD OF WALL PARALLEL AT WF BEAM
1 1/2" = 1'-0"

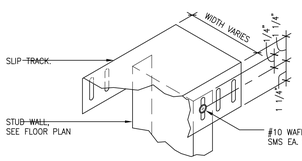

SLIP TRACK ISOMETRIC VIEW

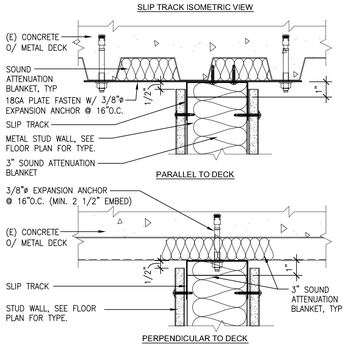

7 TYPICAL HEAD OF WALL
3" = 1'-0"

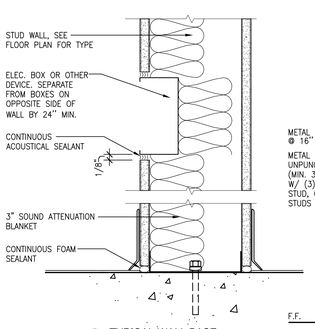

6 TYPICAL WALL BASE
3" = 1'-0"

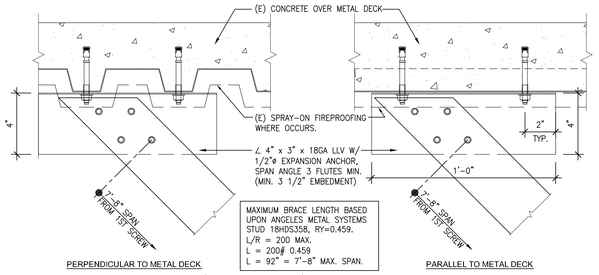

MAXIMUM BRACE LENGTH BASED UPON ANGELES METAL SYSTEMS STUD 18HDS358, RY=0.459.
L/R = 200 MAX.
L = 200# 0.459
L = 92" = 7'-8" MAX. SPAN.

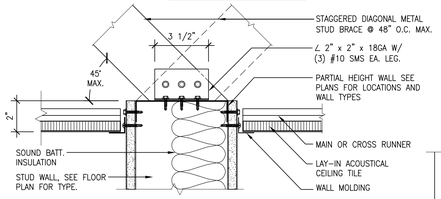

5 PARTIAL HEIGHT WALL
3" = 1'-0"

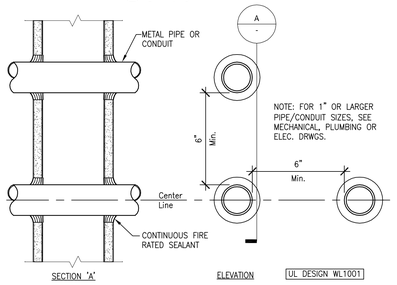

4 FIRESTOPPING AT WALL PENETRATIONS
3" = 1'-0"

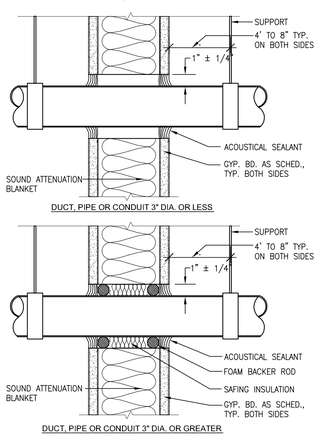

3 TYPICAL PENETRATION DETAIL
3" = 1'-0"

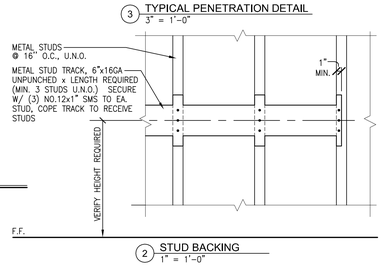

2 STUD BACKING
1" = 1'-0"

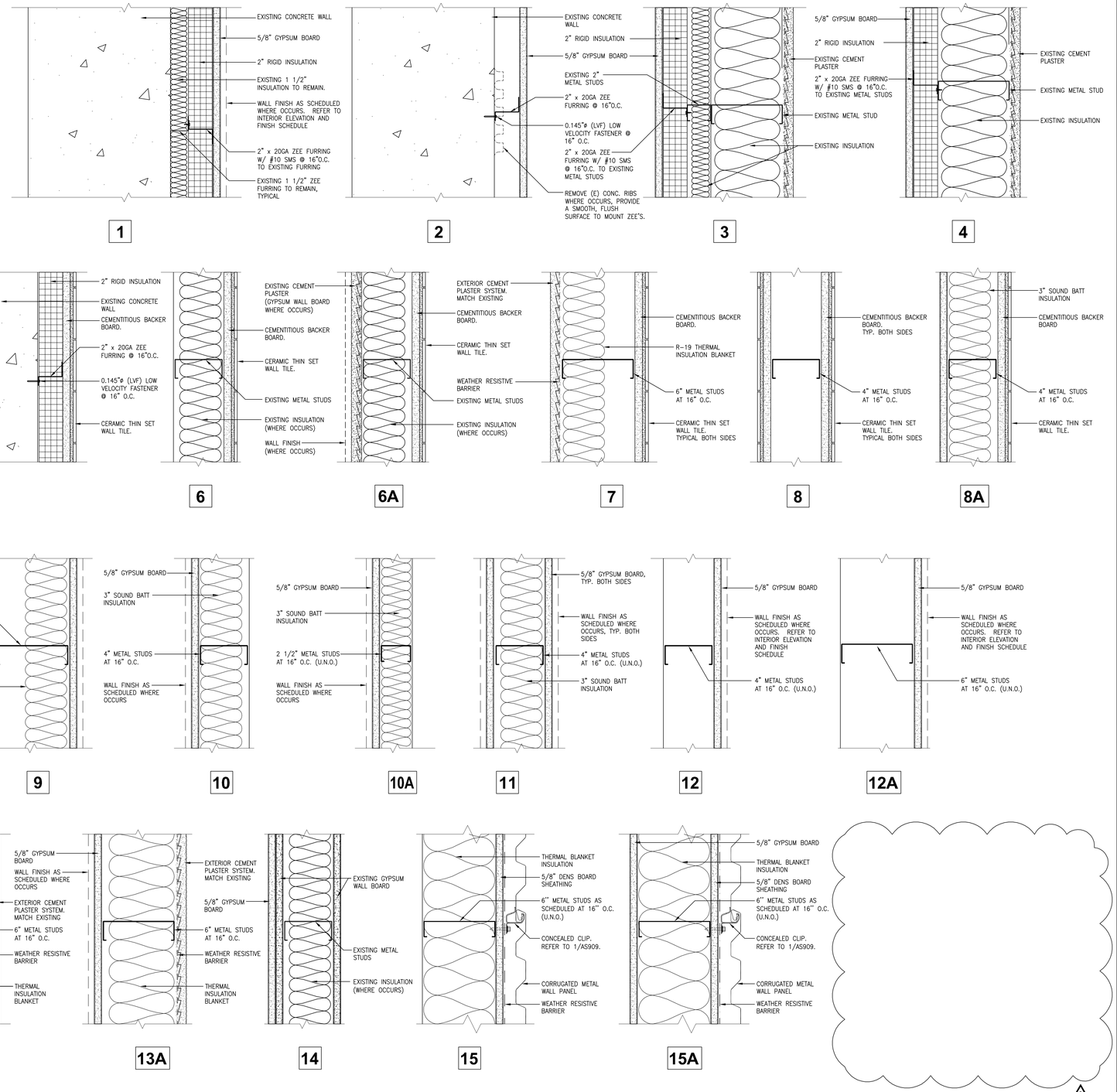

1 TYPICAL WALL TYPES
3" = 1'-0"

Revisions:	Date
1	07/25/13

CONSULTANTS:

LICENSED ARCHITECT — GRAY — No. C-24897 — EXP. 07-31-13 — STATE OF CALIFORNIA

ARCHITECT/ENGINEERS:

HMC Architects
1827 E. Fir Avenue, Studio 103 / Fresno, CA 93720
T 559 322 2444 / www.hmcarchitects.com

Drawing Title: INTERIOR DETAILS

Approved: Project Director

Project Title: BUILDING 24 SEISMIC CORRECTION AND ADDITION

Location: VAMC FRESNO, CA

Date: March 12, 2013 | Checked: BB | Drawn: CLO

Project Number: 570-215

Building Number: 24

Drawing Number: AS906

Dwg. 82 of 176

Office of Construction and Facilities Management

Department of Veterans Affairs

VA FORM 08-6231