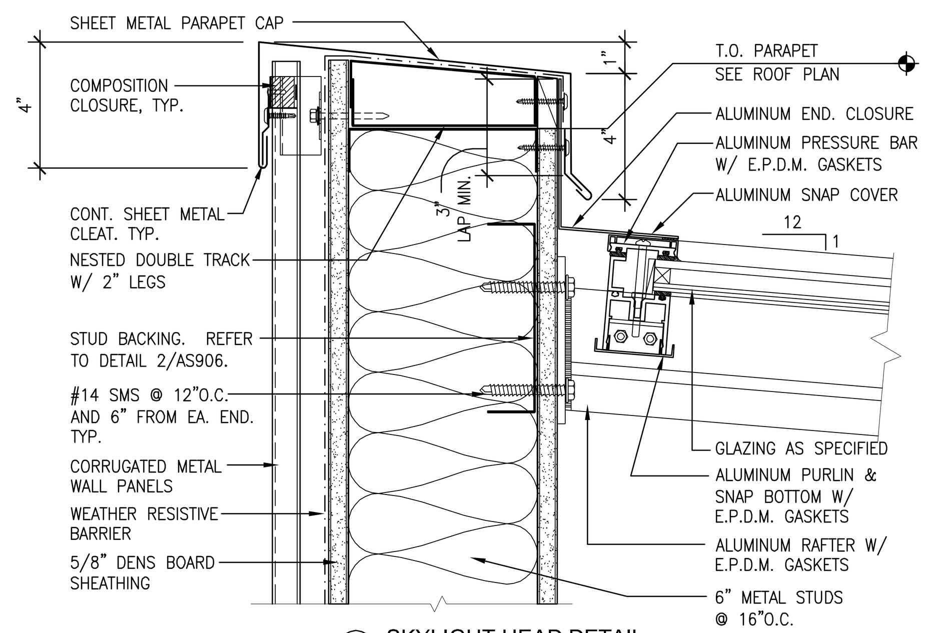

15 SKYLIGHT HEAD DETAIL
3" = 1'-0"

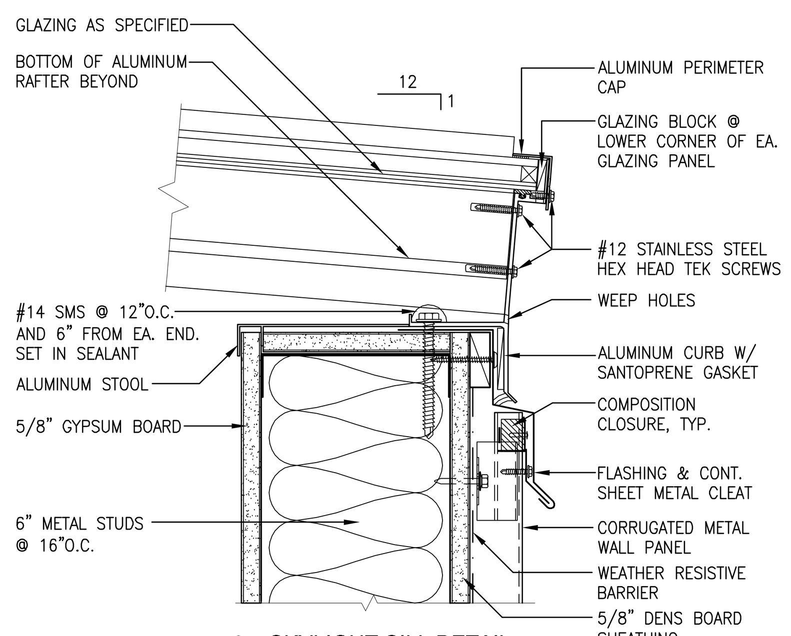

14 SKYLIGHT SILL DETAIL
3" = 1'-0"

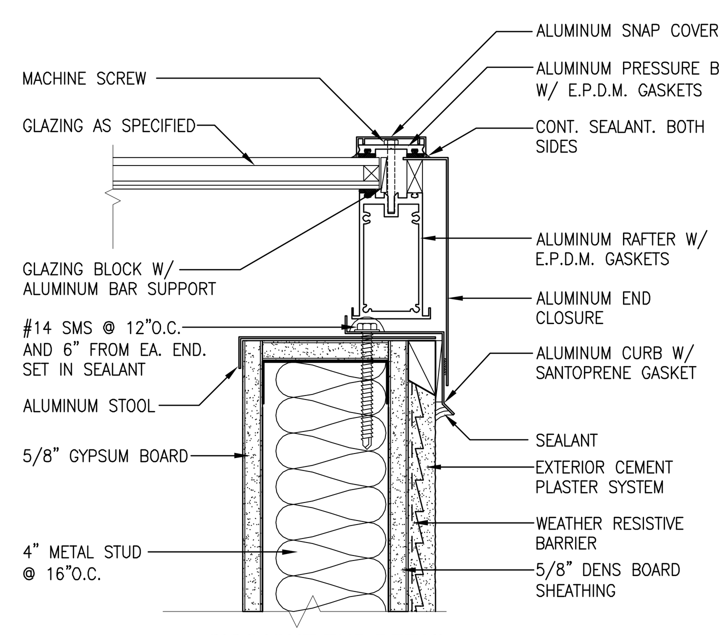

13 SKYLIGHT END DETAIL
3" = 1'-0"

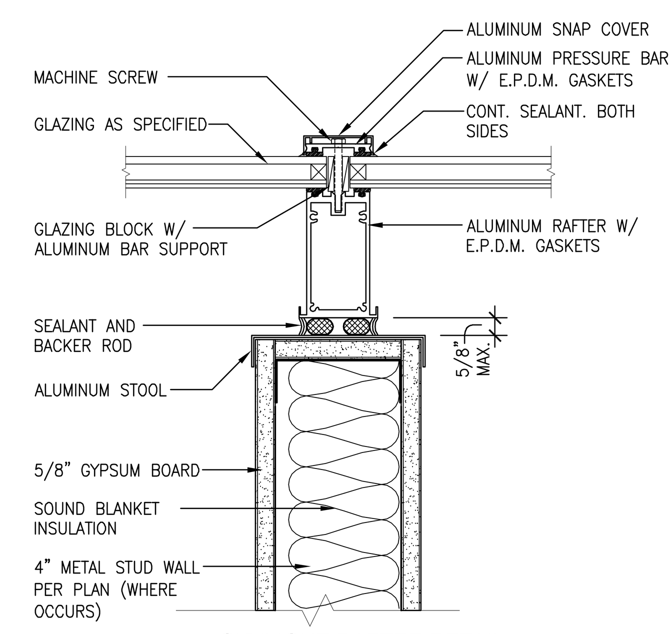

12 SKYLIGHT RAFTER DETAIL
3" = 1'-0"

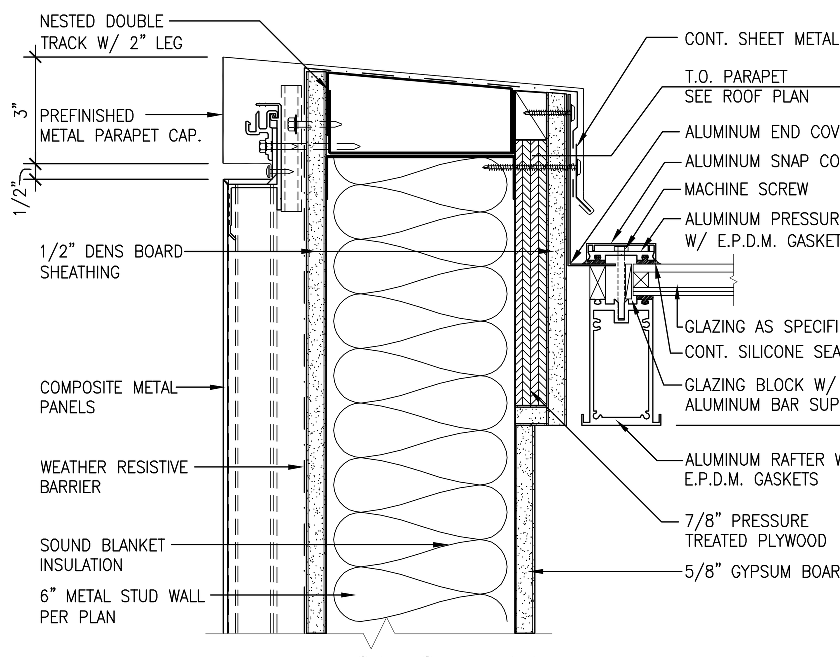

11 SKYLIGHT END DETAIL
3" = 1'-0"

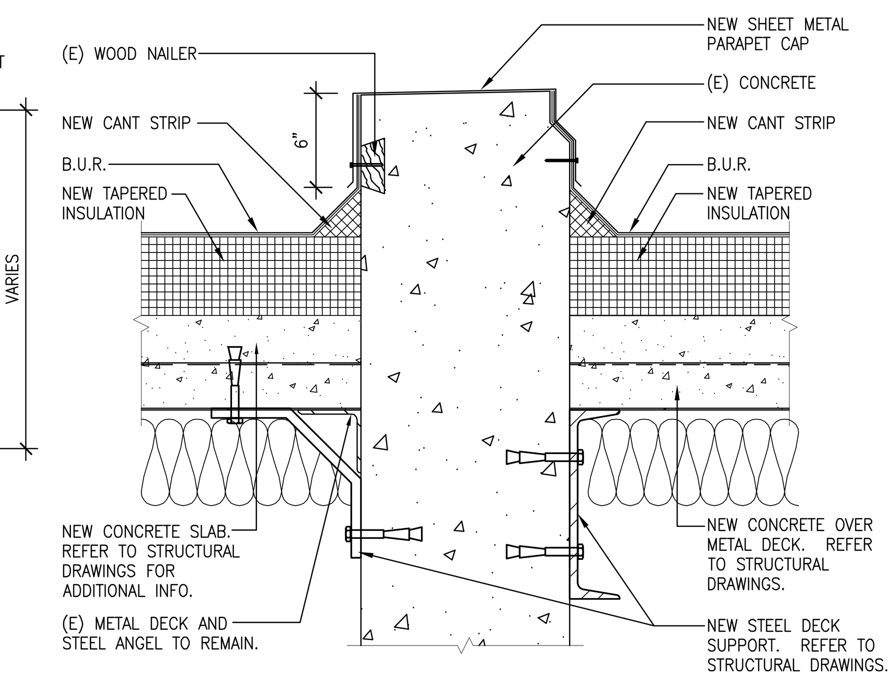

4 BUILT UP ROOF DETAIL
1 1/2" = 1'-0"

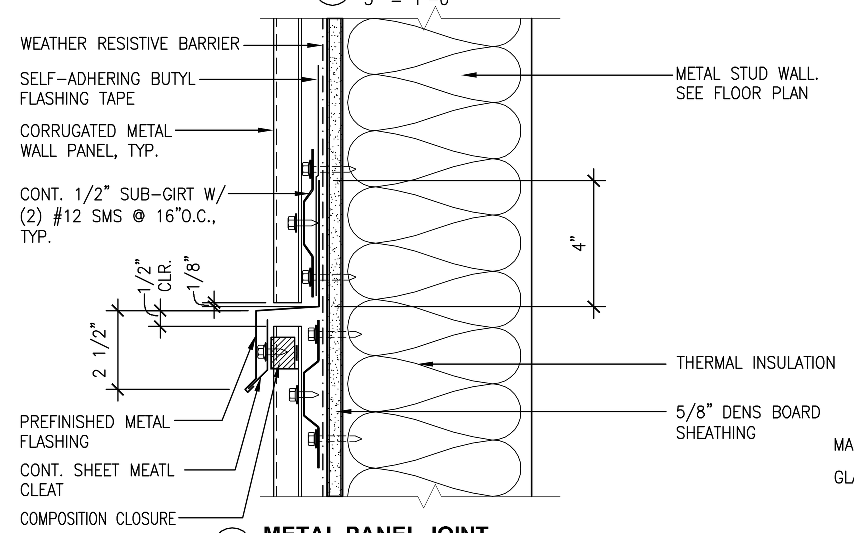

23 METAL PANEL JOINT
3" = 1'-0"

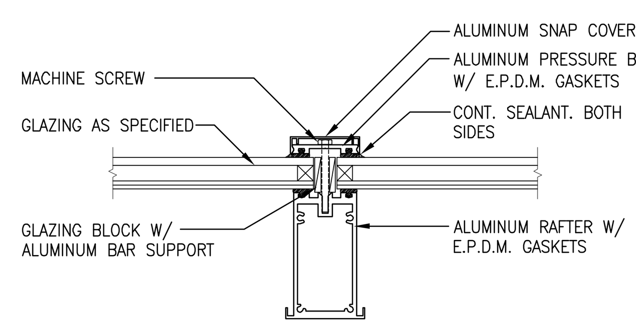

18 TYPICAL SKYLIGHT RAFTER
3" = 1'-0"

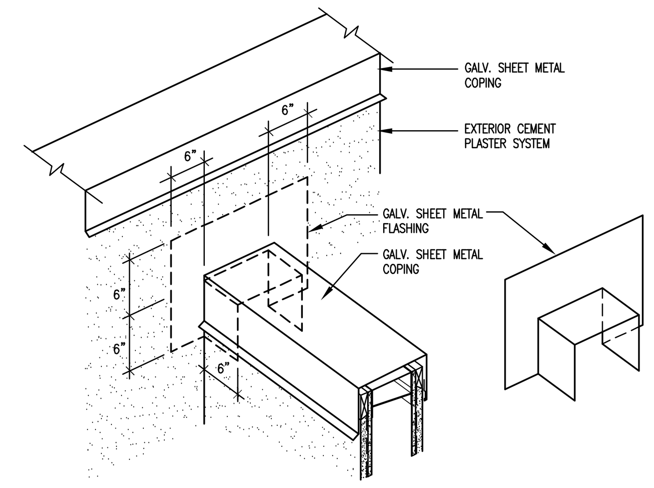

FLASHING AT MID-WALL CONDITION

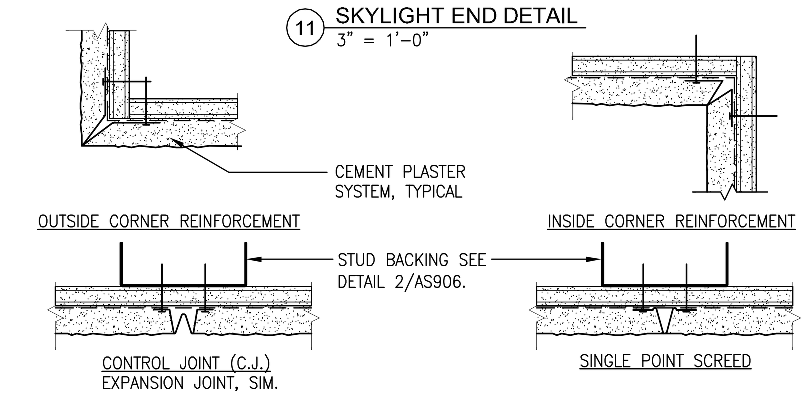

8 CEMENT PLASTER ACCESSORIES
3" = 1'-0"

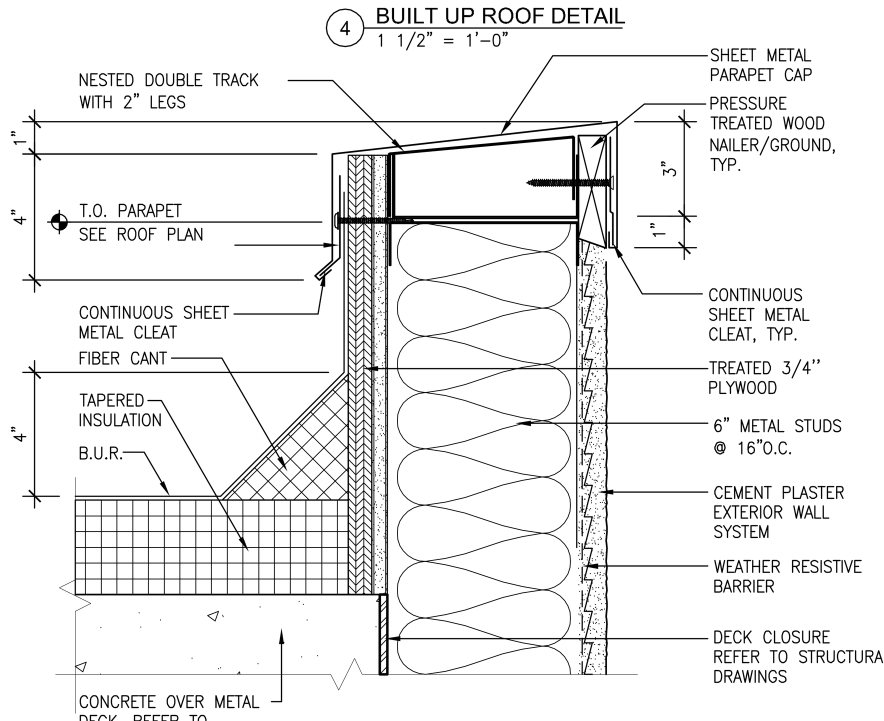

3 PARAPET CAP DETAIL
3" = 1'-0"

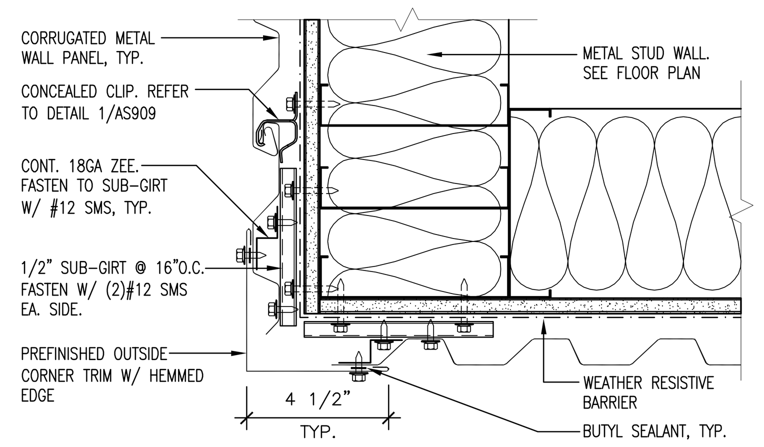

22 METAL PANEL OUTSIDE CORNER
3" = 1'-0"

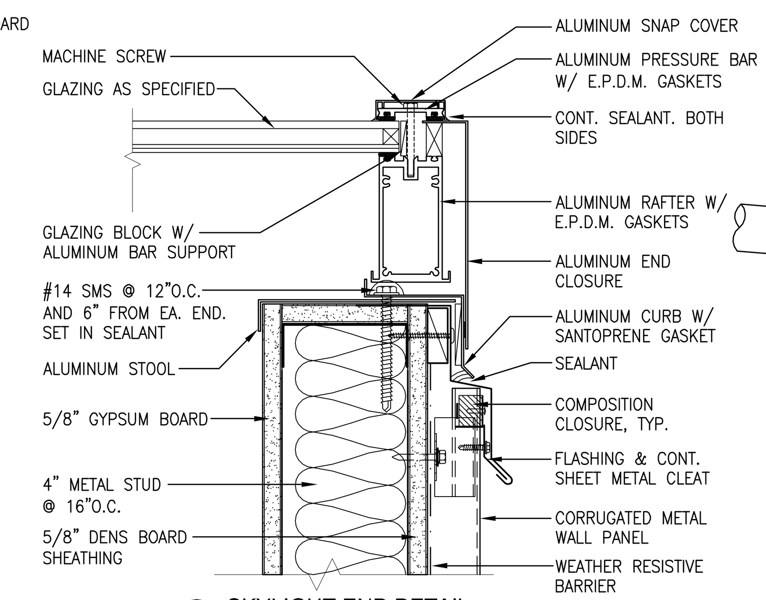

21 SKYLIGHT END DETAIL
3" = 1'-0"

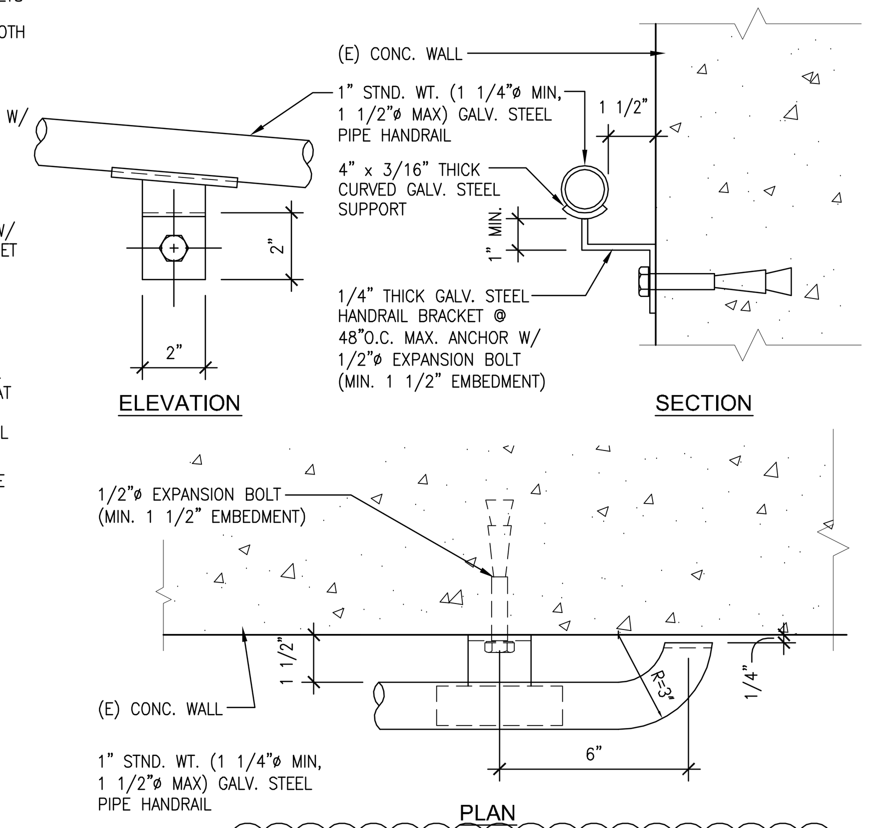

17 GALV. HAND RAIL @ CONC. WALL
3" = 1'-0" (OMIT AT DEDUCT ALT #4)

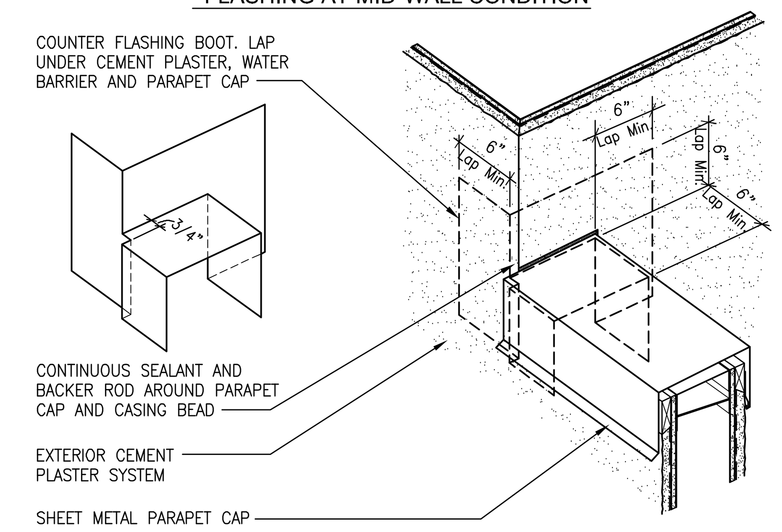

COUNTER FLASHING BOOT LOW PARAPET TO HIGH WALL

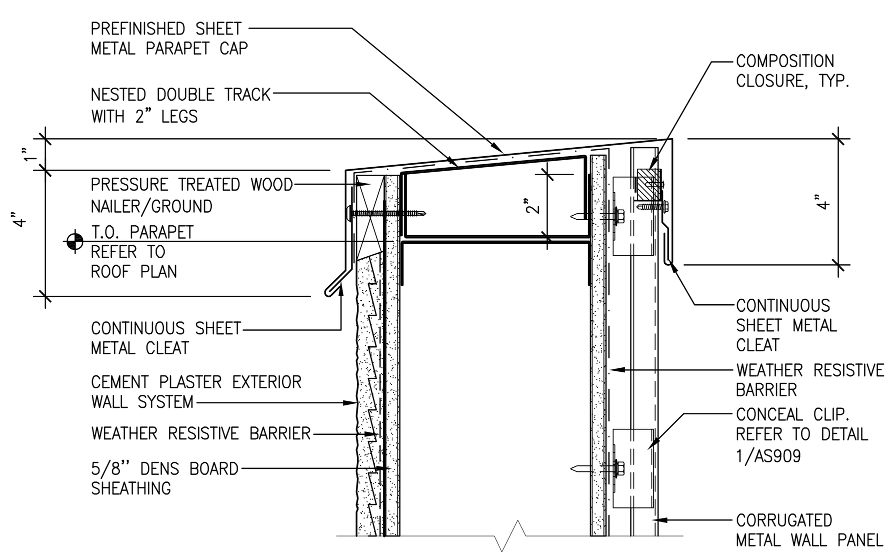

2 PARAPET CAP DETAIL
3" = 1'-0"

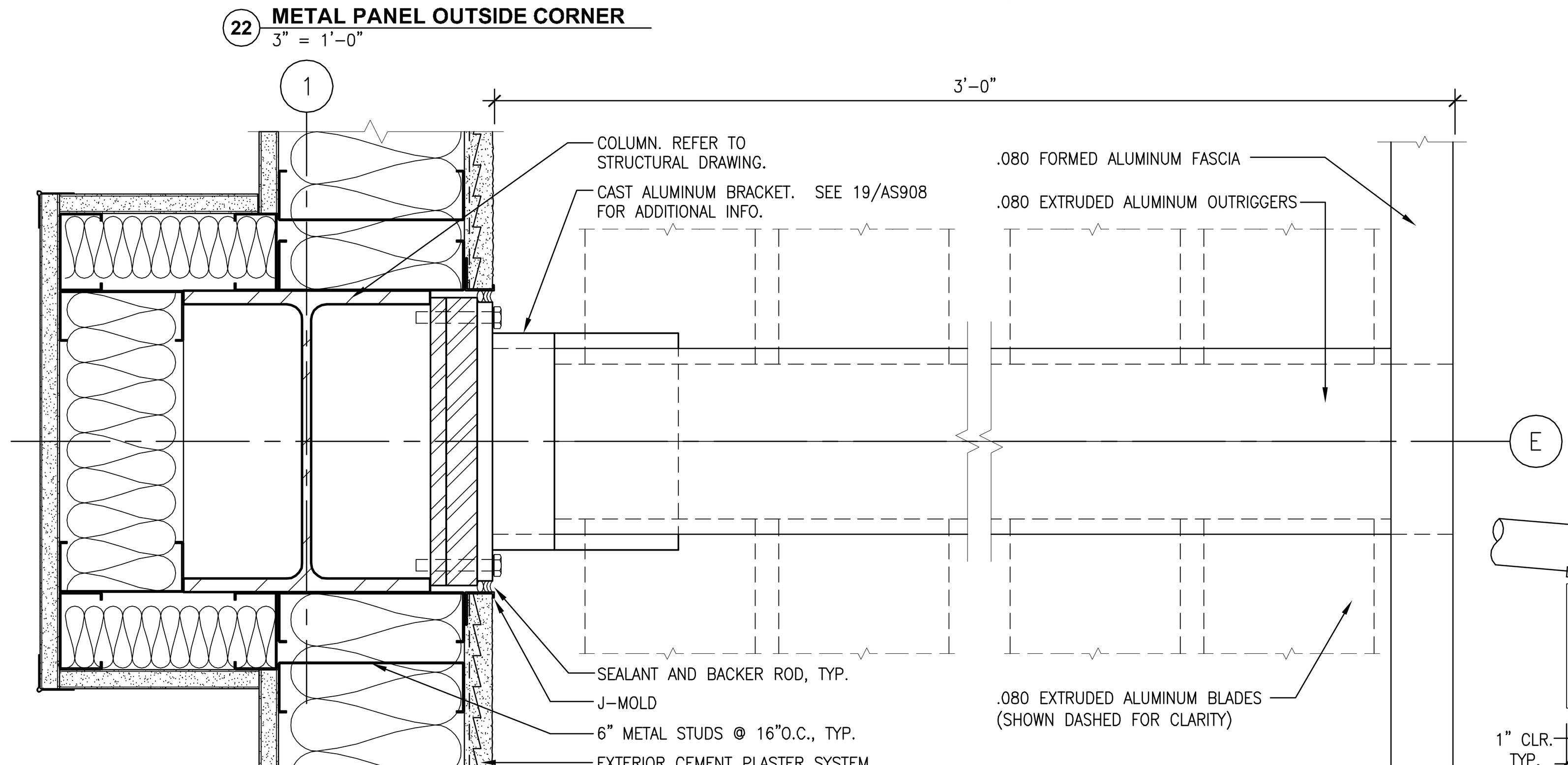

20 ALUMINUM EXTERIOR SUN SCREEN AT WF COL.
3" = 1'-0"

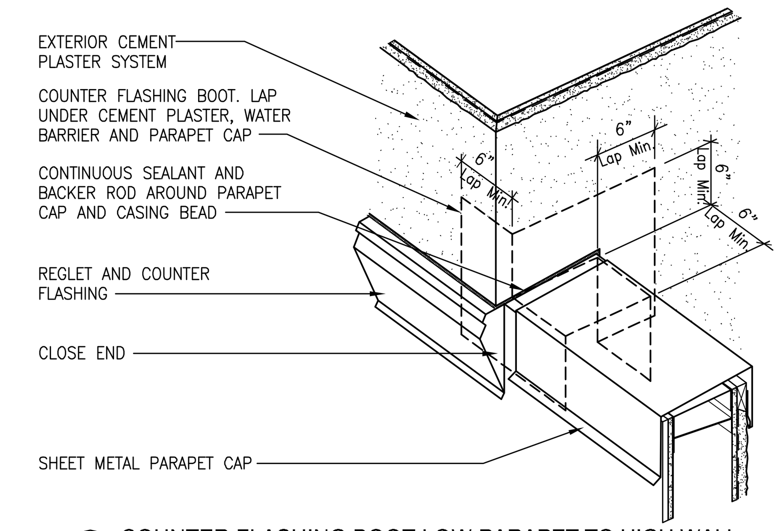

10 COUNTER FLASHING BOOT LOW PARAPET TO HIGH WALL
NO SCALE

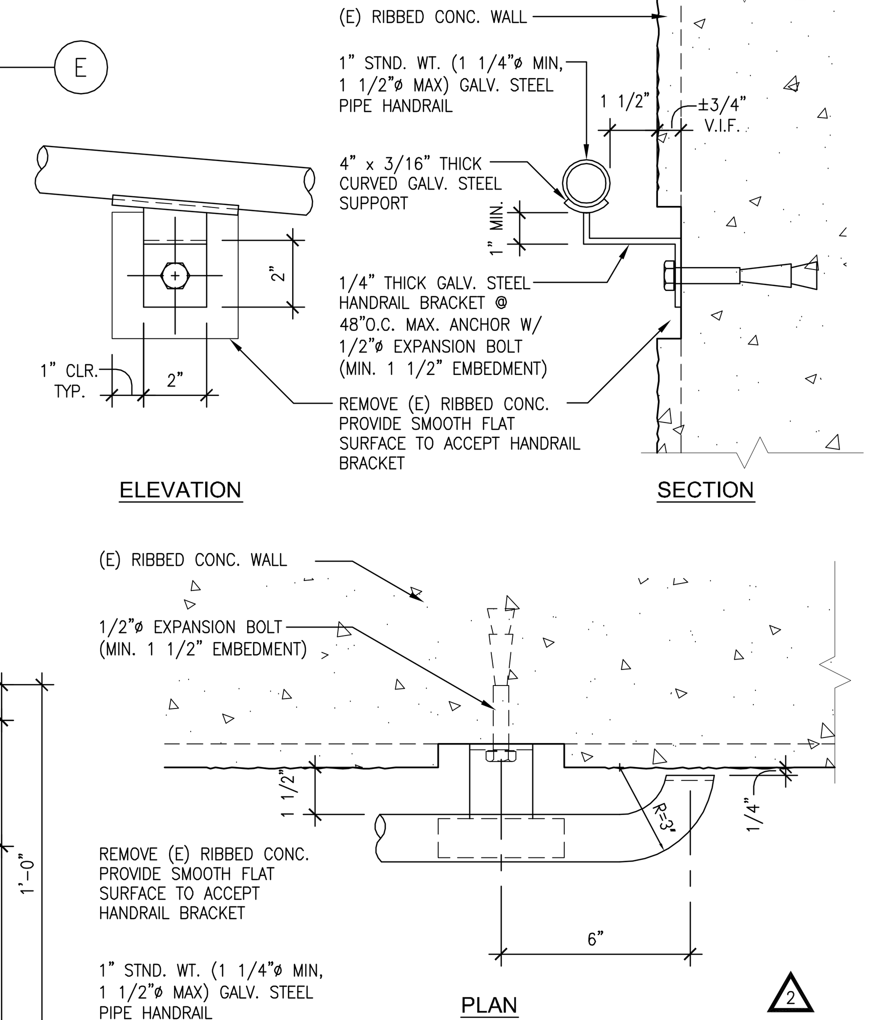

16 GALV. HAND RAIL @ TEXTURED CONC. WALL
3" = 1'-0" (OMIT AT DEDUCT ALT #4)

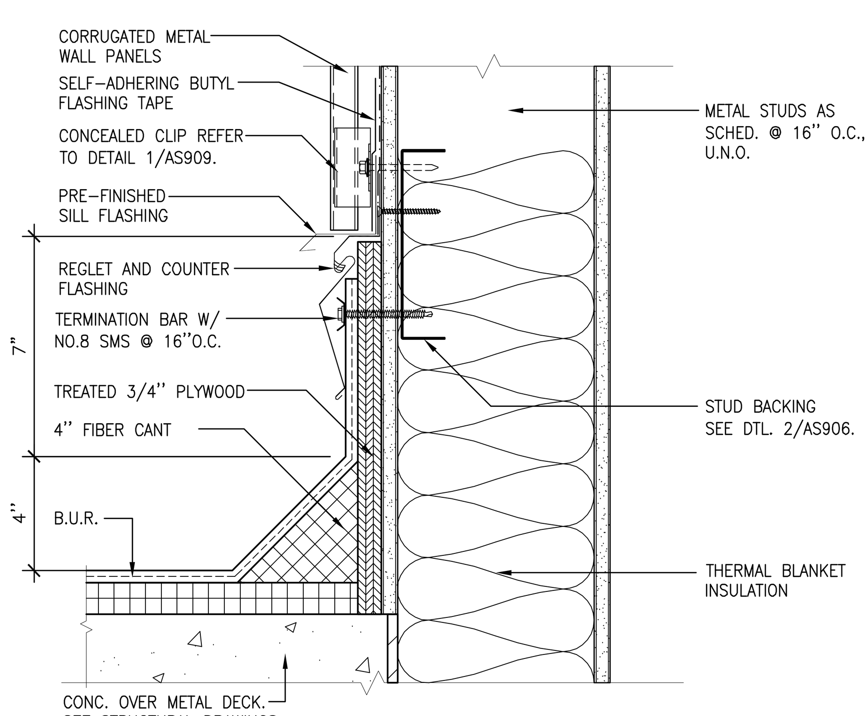

9 ROOF DETAIL
3" = 1'-0"

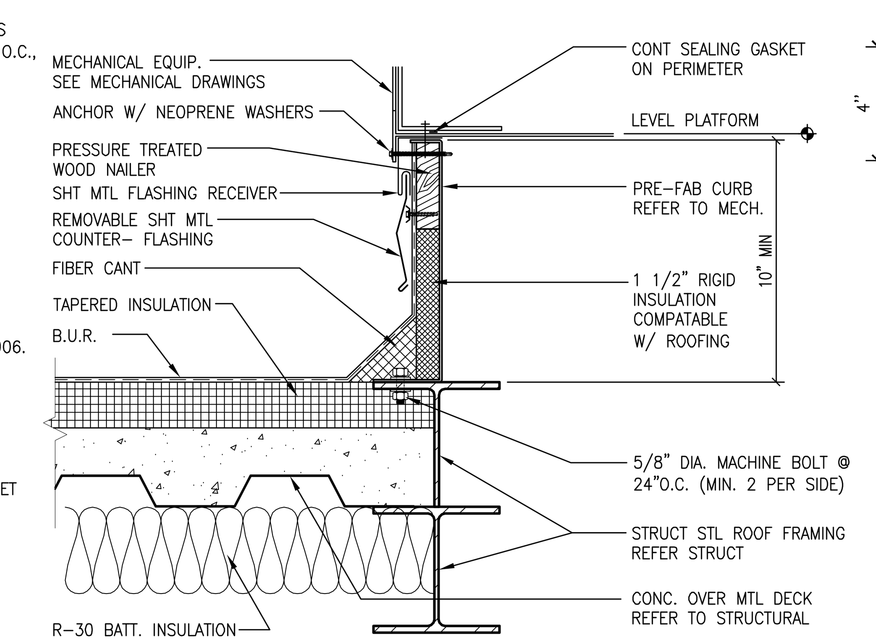

5 MECH. EQUIPMENT CURB PLATFORM
1 1/2" = 1'-0"

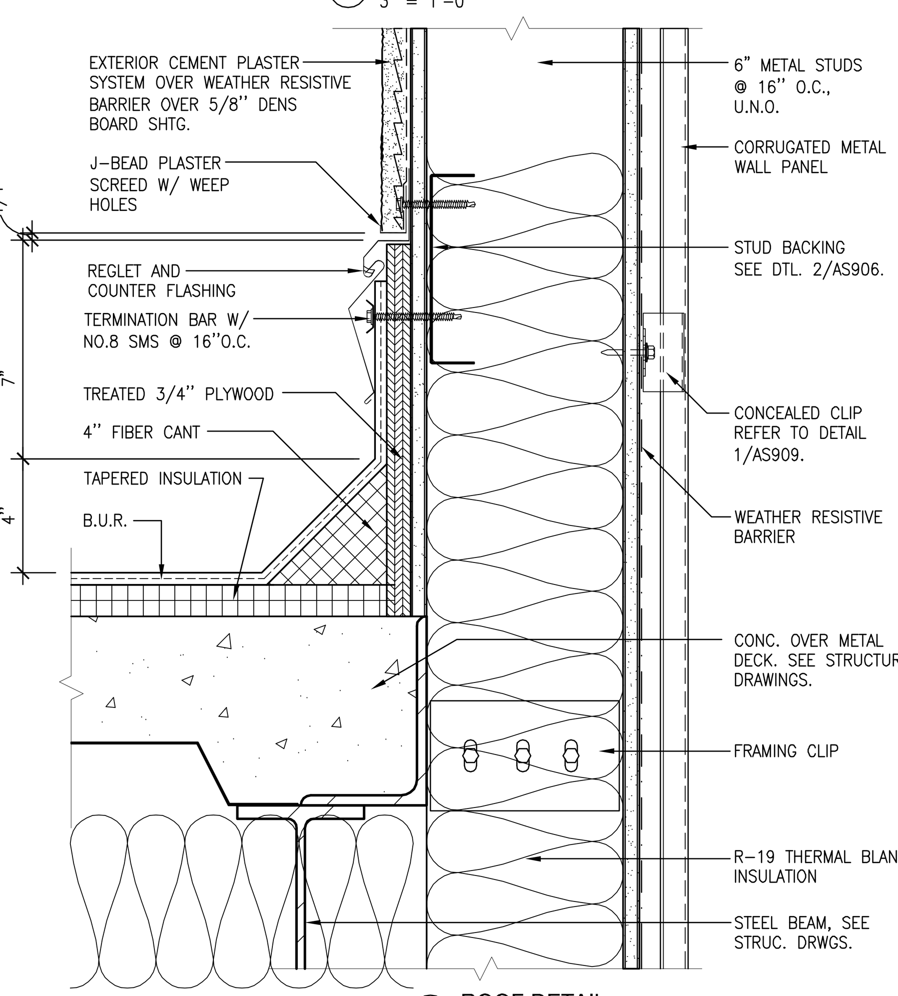

1 ROOF DETAIL
3" = 1'-0"

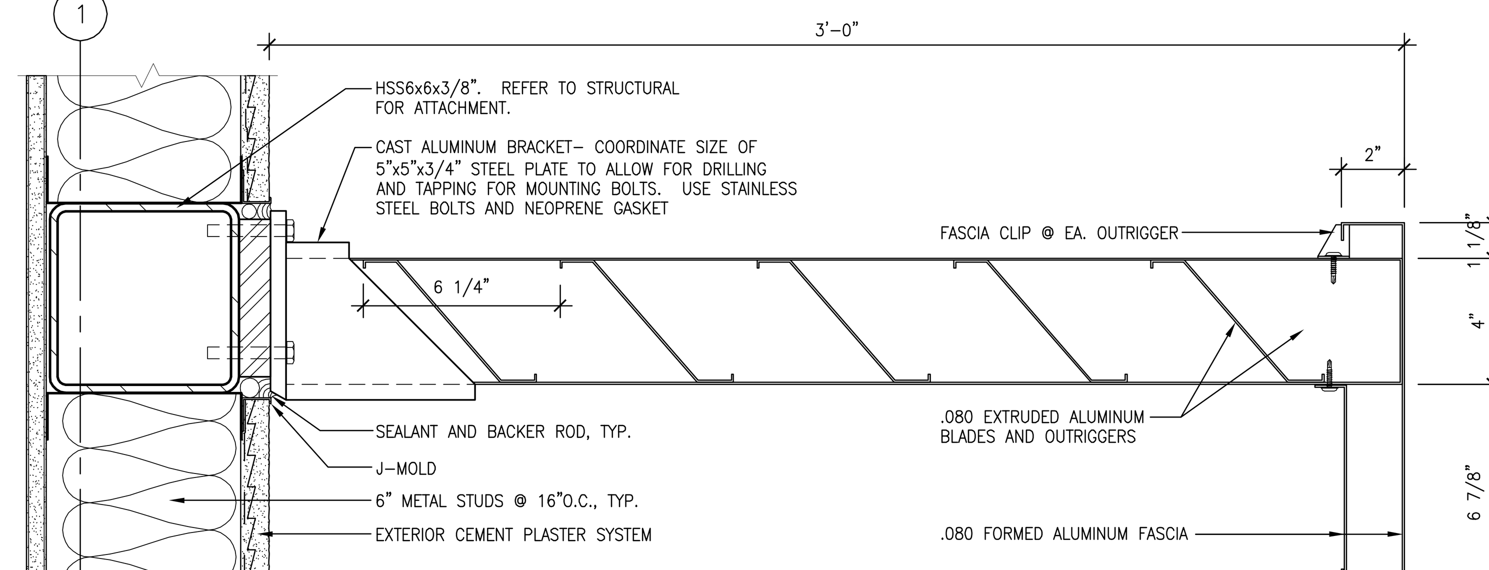

19 ALUMINUM EXTERIOR SUN SCREEN
3" = 1'-0"

Revisions	Date
2	07/25/13

CONSULTANTS:

ARCHITECT/ENGINEERS:

LICENSED ARCHITECT SCOTT A. GRIFFITH NO. C-24897 REN. 07-31-13 STATE OF CALIFORNIA

HMC Architects
1827 E. Fir Avenue, Studio 103 / Fresno, CA 93720
T 559 322 2444 / www.hmcarchitects.com

Drawing Title: EXTERIOR DETAILS

Approved: Project Director

Project Title: BUILDING 24 SEISMIC CORRECTION AND ADDITION

Location: VAMC FRESNO, CA

Date: March 12, 2013 | Checked: BB | Drawn: CLO

Project Number: 570-215

Building Number: 24

Drawing Number: AS908

Dwg. 84 of 176

Office of Construction and Facilities Management

Department of Veterans Affairs

VA FORM 08-6231