PLUMBING ABBREVIATIONS

A/E ARCHITECT / ENGINEER
AD AREA DRAIN
AFF ABOVE FINISH FLOOR
AFG ABOVE FINISH GRADE
AG AIR GAP
AP ACCESS PANEL
AS AUTOMATIC SPRINKLER
ASD ADJUSTABLE SPEED DRIVES
ASD AUTOMATIC SPRINKLER DRAIN
ASHRAE AMERICAN SOCIETY HEATING, REFRIGERATION, AIR CONDITIONING ENGINEERS
ASME AMERICAN SOCIETY MECHANICAL ENGINEERS
ASPE AMERICAN SOCIETY PLUMBING ENGINEERS
ASR AUTOMATIC SPRINKLER RISER
AV ACID VENT
AW ACID WASTE

BFP REDUCED PRESSURE BACKFLOW PREVENTER
BHP BREAK HORSEPOWER
BSP BLACK STEEL PIPE
BT BATHTUB
BTU BRITISH THERMAL UNIT
BTUH BRITISH THERMAL UNIT PER HOUR

C CELSIUS
CGA COMPRESSED GAS ASSOCIATION
CI CAST IRON
CO CLEANOUT
CS CLINICAL SINK
CV CONTROL VALVE

DCW DOMESTIC COLD WATER
DHW DOMESTIC HOT WATER
DHWR DOMESTIC HOT WATER RETURN
DHWR DOMESTIC WATER RETURN
DHWS DOMESTIC HOT WATER SUPPLY
DI DEIONIZED WATER
DN DOWN
DOE DEPARTMENT OF ENERGY
DS DOWNSPOUT
DW DISHWASHER
DWG DRAWING
DWH DOMESTIC WATER HEATER
DWR DRINKING WATER RETURN
DWS DRINKING WATER SUPPLY
DWV DRAIN WASTE VENT

EL ELEVATION
EMCS ENERGY MONOSERRAT AND CENTRAL SYSTEM
EPA ENVIROMENTAL PROTECTION AGENCY
EPACT ENERGY POLICY ACT
ESC ESCUTCHEON
ESH EMERGENCY SHOWER
ET EXPANSION TANK
EWC ELECTRIC WATER COOLER
EWC ELECTRIC WATER COOLER
EWH ELECTRIC WATER HEATER
EWS EYE WASH STATION
EX EXISTING

F FAHRENHEIT
FCO FLOOR CLEANOUT
FCW FILTERED COLD WATER
FD FLOOR DRAIN
FDC FIRE DEPARTMENT (HOSE) CONNECTION
FM FLOW METER
FOP FUEL OIL PUMP
FOR FUEL OIL RETURN
FOS FUEL OIL SUPPLY
FOV FUEL OIL VENT
FS FLOOR SINK
FS FLOW SWITCH
FU FIXTURE UNITS

GAL GALLON
GCO GRADE CLEANOUTS
GPD GALLONS PER DAY
GPH GALLONS PER HOUR
GPM GALLONS PER MINUTE
GPR GAS PRESSURE REGULATOR
GRS GAS REGULATOR STATION
GT GREASE TRAP
GVTR GAS VENT THROUGH ROOF
GWH GAS FIRED WATER HEATER

H&CW HOT AND COLD WATER
HB HOSE BIBB
HD HUB DRAIN
HEX HEAT EXCHANGER
HP HORSEPOWER
HS HAND SINK
HST HOT WATER STORAGE TANK (DOMESTIC)
HWB HOT WATER BOILER
HWCP HOT WATER CIRCULATING PUMP
HWP HOT WATER PUMP
HYD HYDRANT

ICW INDUSTRIAL COLD WATER
INV INVERT
IPC INTERNATIONAL PLUMBING CODE
IRW IRRIGATION WATER
IW INDIRECT WASTE
IWH INSTANTANEOUS WATER HEATER
IWR INDUSTRIAL WATER RETURN
IWS INDUSTRIAL WATER SUPPLY

KW KILOWATT
KWHR KILOWATT-HOUR

L/S LITER PER SECOND
LA LABORATORY AIR
LAV LAVATORY
LBS/HR POUNDS PER HOUR
LCW LABORATORY COLD WATER
LHW LABORATORY HOT WATER
LNG LIQUID NATURAL GAS
LOX LIQUID OXYGEN
LV LABORATORY VACUUM
LW LOW WATER

M METER
MA MEDICAL AIR
MAV MANUAL AIR VENT
MBH 1000 BTUH
MED MEDICAL
MER MECHANICAL EQUIPMENT ROOM
MH MANHOLE
MOU MEMORANDUM OF UNDERSTADING
MSB MOP SERVICE BASIN
MV MEDICAL VACUUM

N2 NITROGEN
N2O NITROUS OXIDE
NC NORMALLY CLOSED
NG NATURAL GAS
NIC NOT IN CONTRACT
NO NORMALLY OPEN
NOM. NOMINAL
NPW NON POTABLE WATER
NTC NOT TO SCALE

O2 OXYGEN
OC ON CENTER
OD OUTSIDE DIAMETER
OFD OVERFLOW DRAIN
OR OPERATING ROOM
OVFL OVERFLOW

PA PASCAL
PD PRESSURE DROP OR DIFFERENCE
PDI PLUMBING AND DRAINAGE INSTITUTE
PG PRESSURE GAGE
PP PLUMBING PUMP
PPM PARTS PER MILLION
PRS PRESSURE REDUCING STATION
PRV PRESSURE REDUCING VALVE
PSI POUNDS PER SQUARE INCH
PSIA POUNDS PER SQUARE INCH ATMOSPHERE
PSIG POUNDS PER SQUARE INCH GAUGE
PTRV PRESSURE TEMPERATURE RELIEF VALVE
PW POTABLE WATER

RD ROOF DRAIN
RDL ROOF DRAIN LEADER
RL ROOF LEADER
RO REVERSE OSMOSIS WATER
RWL RAIN WATER LEADER

SAN SANITARY SEWER
SMACNA SHEET METAL AND AIR CONDITIONING CONTRACTORS NATIONAL ASSOCIATION
SCFM STANDARD CUBIC FOOT/MINUTE
SCW SOFTENED COLD WATER
SDMH STORM DRAIN MANHOLE
SP SUMP PUMP
SPR SPRINKLER LINE
SQFT SQUARE FEET
SS STAINLESS STEEL
ST STORAGE TANK
SW STORM WATER

TCV TEMPERATURE CONTROL VALVE
TD TEMPERATURE DIFFERENCE
TD TRENCH DRAIN
TDH TOTAL DYNAMIC HEAD
TEMP TEMPERATURE
TMV THERMOSTATIC MIXING VALVE
TP TRAP PRIMER
TSTAT THERMOSTAT
TWR TEMPERED WATER RETURN
TWS TEMPERED WATER SUPPLY
TYP TYPICAL

UPC UNIFORM PLUMBING CODE

V VENT
VAC VACUUM
VB VACUUM BREAKER
VCO VACUUM CLEANER OUTLET
VP VACUUM PUMP
VS VENT STACK
VTR VENT THROUGH ROOF

W WASTE
WC WATER CLOSET
WCO WALL CLEANOUT
WG WATER GAGE
WH WALL HYDRANT
WH WATER HEATER
WHA WATER HAMMER ARRESTER
WL WATER LINE
WM WATER METER
WPD WATER PRESSURE DROP
WS WASTE STACK

YCO YARD CLEANOUT
YH YARD HYDRANT

ZVB ZONE VALVE BOX

PLUMBING PIPING SYMBOLS

DOMESTIC COLD WATER, COLD WATER
DOMESTIC HOT WATER, HOT WATER
DOMESTIC HOW WATER RETURN, HOT WATER RETURN
MA MEDICAL AIR
MV MEDICAL VACUUM
D DRAIN
SS SANITARY SEWER
SS SANITARY SEWER, FLOOR BELOW
RD STORM WATER
RD STORM WATER, FLOOR BELOW
ORD OVERFLOW STORM WATER
OX OXYGEN
PNEUMATIC TUBE SYSTEM

GENERAL PLUMBING SYMBOLS

DIRECTION OF PIPE PITCH (DOWN)
DIRECTION OF FLOW
ANCHOR
REDUCER OR INCREASER
ECCENTRIC REDUCER
TOP CONNECTION, 45° OR 90°
BOTTOM CONNECTION, 45° OR 90°
SIDE CONNECTION
CAPPED OUTLET
RISE OR DROP IN PIPE
UNION
PIPE UP
PIPE DOWN
POINT OF CONNECTION BETWEEN NEW AND EXISTING WORK
LIMIT OF DEMOLITION
INVERTED BUCKET TRAP SET INCLUDING PIPING ACCESSORIES
FLOAT & THERMOSTATIC TRAP SET INCLUDING PIPING ACCESSORIES
STRAINER
THERMOMETER
PRESSURE GAGE
FLOW ELEMENT
CLEAN OUT
HOSE BIB

PLUMBING VALVE SYMBOLS

GATE VALVE
GLOBE VALVE
GATE VALVE WITH 3/4 " HOSE ADAPTER
CHECK VALVE
ANGLE GLOBE VALVE
BUTTERFLY VALVE
BALL VALVE
MODULATING CONTROL VALVE
TWO POSITION CONTROL VALVE
THREE-WAY MODULATING CONTROL VALVE
THREE-WAY TWO POSITION CONTROL VALVE
PRESSURE REGULATING VALVE
AUTOMATIC FLOW CONTROL VALVE
PRESSURE RELIEF VALVE
MANUAL AIR VENT
TEST PLUG (PRESSURE/TEMPERATURE)
AUTOMATIC AIR VENT

DRAWING SYMBOLS

1 — DETAIL NUMBER
P-001 — DRAWING NUMBER WHERE DRAWN

FULLY SPRINKLERED

Revisions	Date

CONSULTANTS:

REGISTERED PROFESSIONAL ENGINEER JAMES WAYNE MCCOY 15160 OKLAHOMA

ARCHITECT/ENGINEERS: CERT. OF AUTHORITY 3722 EXP. 06/30/2013

BENHAM / ELLERBE BECKET

Drawing Title	PLUMBING LEGEND AND ABBREVIATIONS
Approved: Project Director	
Project Title	OKC VA MEDICAL CENTER 8TH FLOOR SICU ADDITION
Location	OKLAHOMA CITY, OK
Date	04/01/2013
Checked	JK
Drawn	DT
Project Number	635-406
Building Number	001
Drawing Number	P-001
Dwg. — of —	

Office of Construction and Facilities Management
Department of Veterans Affairs

VA FORM 08-6231

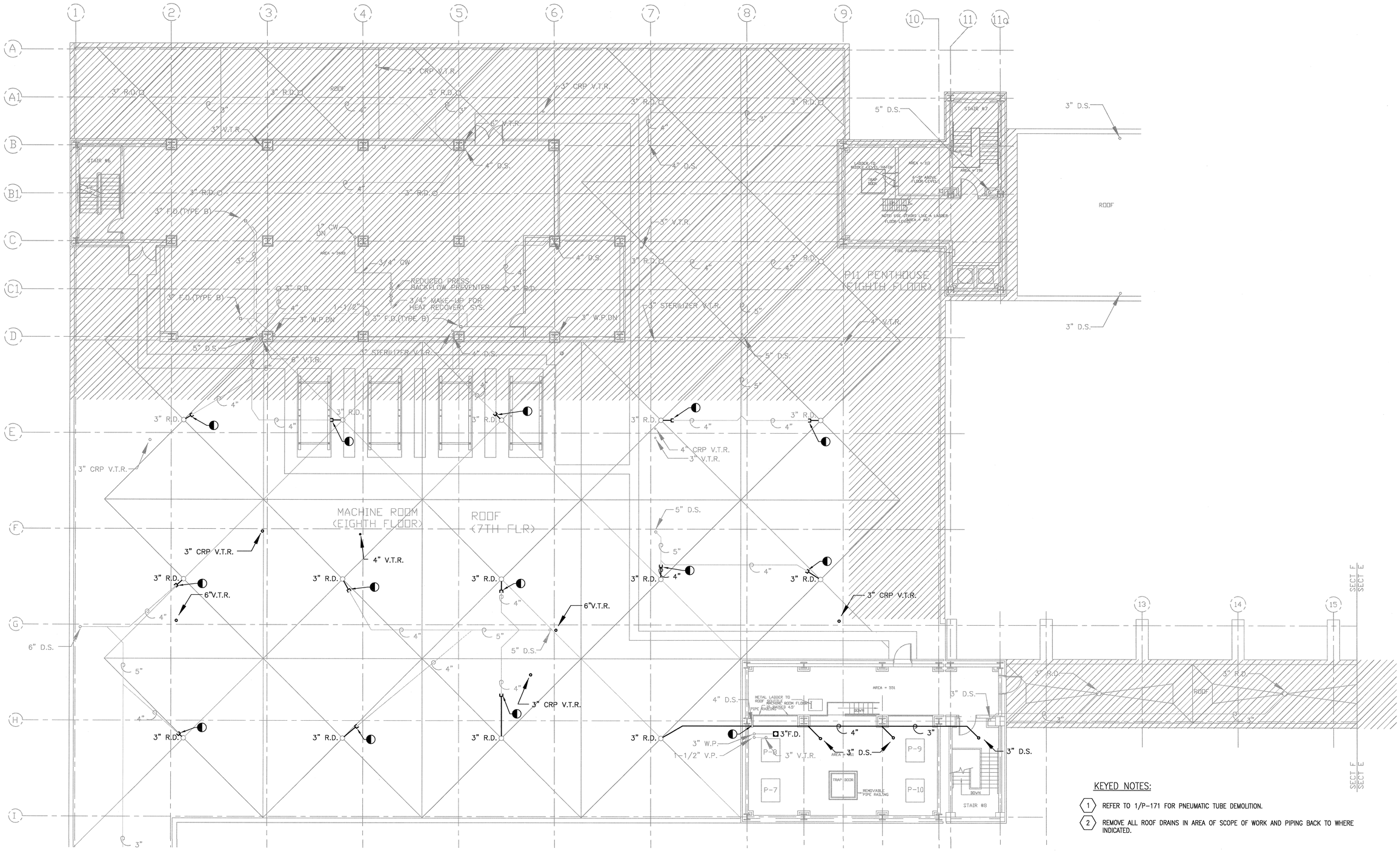

1 PD181 ROOF - DEMOLITION PLAN
SCALE 1/8"=1'-0"

NORTH PLAN

KEYED NOTES:

1. REFER TO 1/P-171 FOR PNEUMATIC TUBE DEMOLITION.
2. REMOVE ALL ROOF DRAINS IN AREA OF SCOPE OF WORK AND PIPING BACK TO WHERE INDICATED.

FULLY SPRINKLERED

Revisions	Date

CONSULTANTS:

ARCHITECT/ENGINEERS: CERT. OF AUTHORITY 3722 EXP. 06/30/2013

BENHAM / ELLERBE BECKET

Drawing Title	PLUMBING ROOF - DEMOLITION PLAN
Approved Project Director	
Project Title	OKC VA MEDICAL CENTER 8TH FLOOR SICU ADDITION
Location	OKLAHOMA CITY, OK
Date	04/01/2013
Checked	JK
Drawn	DT
Project Number	635-406
Building Number	001
Drawing Number	PD181
Dwg. — of —	

Office of Construction and Facilities Management

Department of Veterans Affairs

VA FORM 08-6231

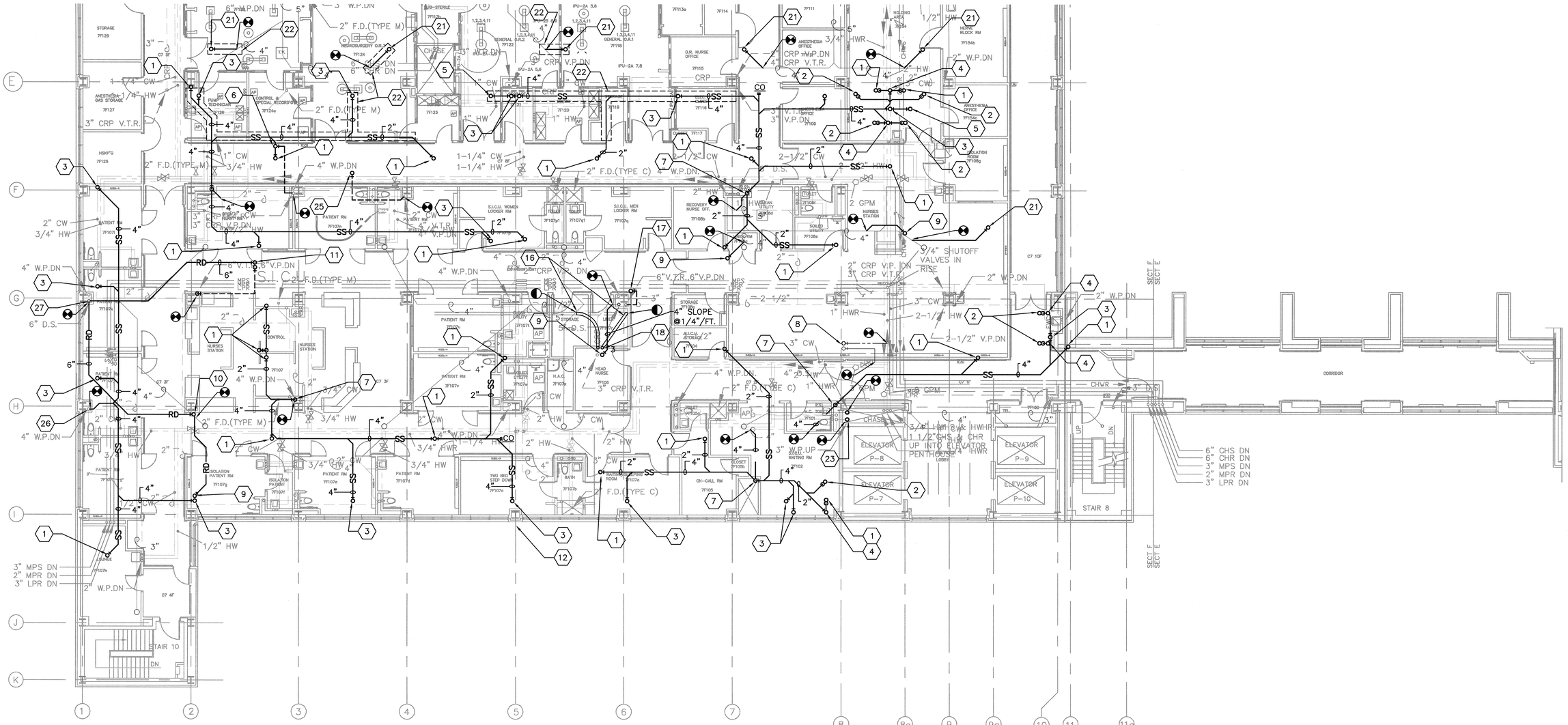

1 P-171 **SEVENTH FLOOR PLAN**
SCALE: 1/8"=1'-0"

NORTH PLAN

KEYED NOTES:

1. 2" WASTE FROM ABOVE.
2. 3" WASTE FROM ABOVE.
3. 4" WASTE FROM ABOVE.
4. 2" VENT UP TO FLOOR ABOVE.
5. 4" LINE FROM FLOOR CLEANOUT ABOVE.
6. 3" CPR VENT REROUTED UP TO FLOOR ABOVE.
7. 4" WASTE DOWN IN CHASE TO FLOOR BELOW AND CONNECT TO EXISTING WASTE ON LEVEL 6.
8. 1-1/2" HW AND 2-1/2" CW UP TO FLOOR ABOVE, 3/4" HWR FROM FLOOR ABOVE.
9. 4" STORM DRAIN FROM FLOOR ABOVE.
10. 6" STORM DRAIN FROM FLOOR ABOVE.
11. 6" STORM DRAIN FROM FLOOR ABOVE. 6" REROUTED VENT UP TO FLOOR ABOVE.
12. SEE DETAIL 2/P-171 THIS SHEET FOR NEW PLUMBING WORK IN THIS AREA EFFECTED BY THE PLAN CHANGES. NOTE: DETAIL 1/P-171 THIS SHEET ONLY SHOWS THE EXISTING FLOOR PLAN AND PLUMBING AS WELL AS NEW PLUMBING SERVING THE EIGHTH FLOOR.
13. NOT USED.
14. NOT USED.
15. NOT USED.
16. CONNECT NEW 6" PNEUMATIC TUBE SYSTEM TO EXISTING. FIELD VERIFY EXACT LOCATION.
17. REROUTE EXISTING 6" VENT UP TO FLOOR ABOVE.
18. (2) NEW 6" PNEUMATIC TUBE LINES UP TO FLOOR ABOVE.
19. NOT USED.
20. NOT USED.
21. 4" STORM DRAIN FROM ROOF DRAIN ABOVE.
22. PROVIDE DRIP PAN UNDER NEW PIPING EXTENDING A MINIMUM OF 1' ON EACH SIDE OF PIPING WHERE POSSIBLE. PROVIDE LEAK DETECTING CABLE IN DRIP PAN AND CONNECT TO BUILDING EMCS CONTROL.
23. 3" WASTE AND 4" STORM FROM FLOOR ABOVE AND CONNECT TO EXISTING.
24. NOT USED.
25. 4" REROUTE VENT UP TO FLOOR ABOVE.
26. CONNECT TO EXISTING WASTE RISER.
27. CONNECT TO EXISTING STORM RISER.

FULLY SPRINKLERED

Revisions	Date

CONSULTANTS:

REGISTERED PROFESSIONAL ENGINEER JAMES RANDEE WALSBY 15160 4-1-13 OKLAHOMA

ARCHITECT/ENGINEERS: CERT. OF AUTHORITY 3722 EXP. 06/30/2013

BENHAM / ELLERBE BECKET

Drawing Title	PLUMBING SEVENTH FLOOR PLAN
Approved Project Director	
Project Title	OKC VA MEDICAL CENTER 8TH FLOOR SICU ADDITION
Location	OKLAHOMA CITY, OK
Date	04/01/2013
Checked	JK
Drawn	DT
Project Number	635-406
Building Number	001
Drawing Number	P-171
Dwg. — of —	

Office of Construction and Facilities Management

Department of Veterans Affairs

VA FORM 08-6231

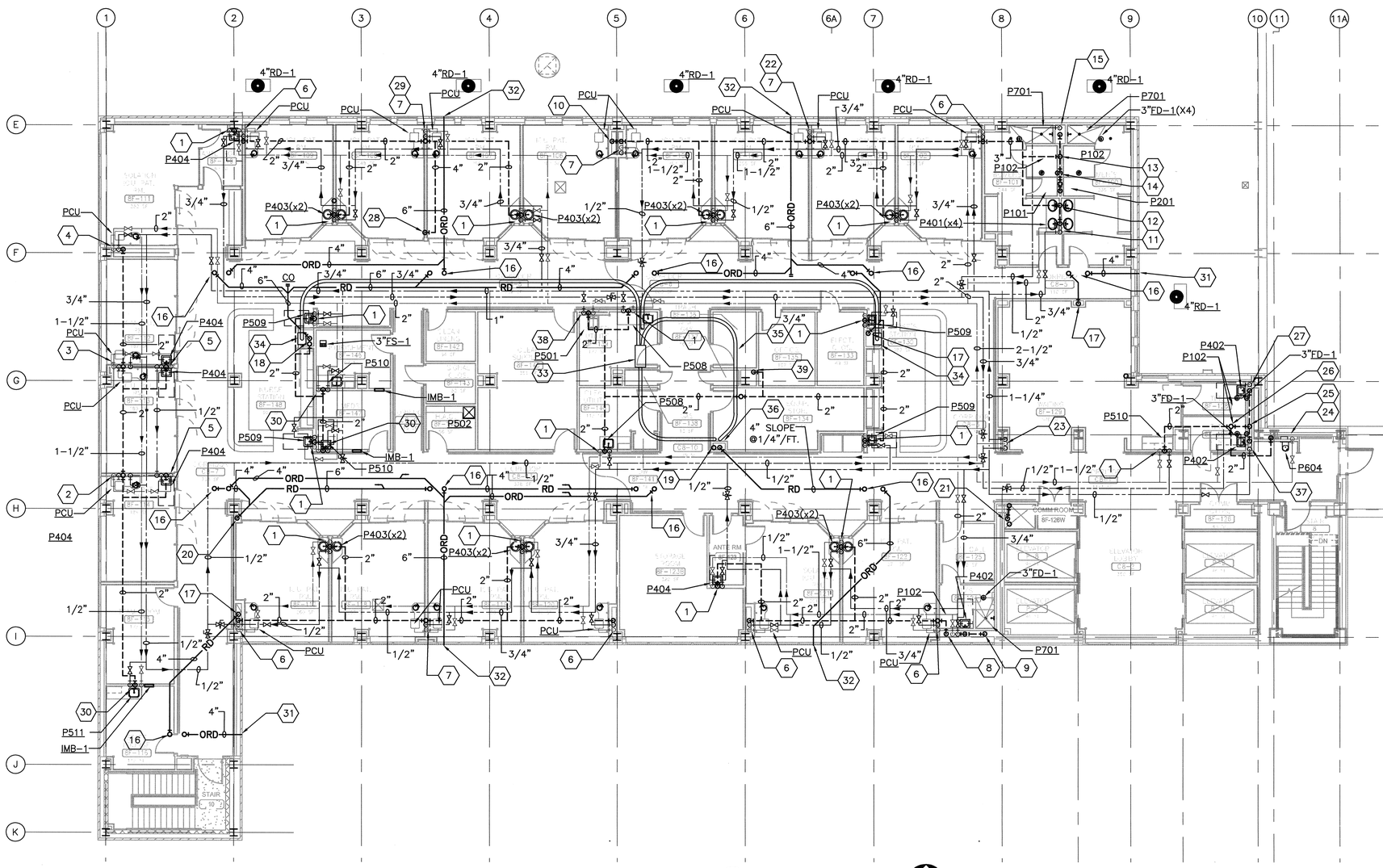

1 P-181 EIGHTH FLOOR PLAN
SCALE: 1/8"=1'-0"

NORTH PLAN

KEYED NOTES:

1. 2" WASTE DOWN TO FLOOR BELOW AND 2" VENT RISE TO ABOVE CEILING. 1/2" CW AND HW DOWN.
2. 2" WASTE DOWN TO FLOOR BELOW AND 2" VENT RISE TO ABOVE CEILING. 1-1/4" CW DOWN AND 1/2" HW TO FIXTURE.
3. 2" WASTE DOWN TO FLOOR BELOW AND 2" VENT RISE TO ABOVE CEILING. 1-1/2" CW DOWN AND 1/2" HW TO FIXTURES.
4. 2" WASTE DOWN TO FLOOR BELOW AND 2" VENT RISE TO ABOVE CEILING. 1-1/4" CW AND 1/2" HW DOWN.
5. 2" WASTE IN WALL OVER TO PATIENT CARE UNIT WASTE AND 2" VENT RISE TO ABOVE CEILING. 1/2" CW AND 1/2" HW DOWN.
6. 2" WASTE DOWN TO FLOOR BELOW AND 2" VENT RISE TO ABOVE CEILING. 1-1/4" CW AND 1/2" HW DOWN.
7. 2" WASTE DOWN TO FLOOR BELOW AND 2" VENT RISE TO ABOVE CEILING. 1-1/2" CW AND 1/2" HW DOWN.
8. 4" WASTE DOWN TO FLOOR BELOW AND 2" VENT RISE TO ABOVE CEILING. 1-1/4" CW AND 3/4" HW DOWN. ROUTE 1/2" HW TO LAVATORY AND 3/4" CW AND HW TO SHOWER.
9. 2" VENT UP FROM FLOOR BELOW, PICK UP 2" VENT FROM LAVATORY AND ROUTE TO WATER CLOSET VENT RISER.
10. 2" WASTE DOWN TO FLOOR BELOW AND 2" VENT RISE TO ABOVE CEILING. ROUTE 1-1/4" CW AND 1/2" HW FROM ADJACENT ROOM AT NOTE #7.
11. 2" WASTE DOWN TO FLOOR BELOW, 2" CW AND 1" HW DOWN.
12. 2" VENT RISE TO ABOVE CEILING.
13. 4" WASTE DOWN TO FLOOR BELOW AND 2" VENT RISE TO ABOVE CEILING.
14. 2" VENT UP FROM FLOOR BELOW.
15. 2" VENT UP FROM FLOOR BELOW AND 1/2" HWR UP TO ABOVE CEILING.
16. 4" STORM AND OVERFLOW DRAIN FROM ABOVE.
17. 4" STORM DRAIN DOWN TO FLOOR BELOW.
18. 6" STORM DRAIN DOWN TO FLOOR BELOW, 6" REROUTED VENT FROM FLOOR BELOW UP TO 6" V.T.R.
19. EXISTING 3" CRP V.T.R. EXTENDED UP TO NEW 3" CRP V.T.R. 4" STORM DRAIN DOWN TO FLOOR BELOW.
20. 6" STORM DRAIN DOWN TO FLOOR BELOW.
21. 4" STORM DRAIN FROM ABOVE, CONNECT WITH HORIZONTAL 4" STORM AND ROUTE TO FLOOR BELOW. 3" WASTE DOWN TO FLOOR BELOW.
22. 3" VENT UP TO 3" V.T.R.
23. 1-1/2" HW AND 2-1/2" CW FROM FLOOR BELOW AND RISE TO ABOVE CEILING. 3/4" HWR DOWN TO FLOOR BELOW.
24. 2" SANITARY DOWN TO FLOOR BELOW AND 2" VENT RISE TO ABOVE CEILING. 1/2" CW DOWN.
25. 4" WASTE DOWN TO FLOOR BELOW AND 2" VENT RISE TO ABOVE CEILING.
26. 2" VENT RISE TO 2" V.T.R.
27. 1/2" HWR UP TO ABOVE CEILING.
28. 4" REROUTED VENT UP FROM FLOOR BELOW AND RISE TO ABOVE CEILING.
29. 4" VENT UP TO 4" V.T.R.
30. 2" WASTE DOWN TO FLOOR BELOW AND 2" VENT RISE TO ABOVE CEILING. 1/2" CW AND HW DOWN. ROUTE 1/2" CW OVER TO ICE-MAKER BOX.
31. TERMINATE WITH 4" DOWNSPOUT NOZZLE ZURN MODEL# Z199 ABOVE CEILING. ALL DOWNSPOUT NOZZLES SHALL BE MOUNTED AT THE SAME CENTERLINE ELEVATION ON THIS LEVEL.
32. TERMINATE WITH 6" DOWNSPOUT NOZZLE ZURN MODEL# Z199 ABOVE CEILING. ALL DOWNSPOUT NOZZLES SHALL BE MOUNTED AT THE SAME CENTERLINE ELEVATION ON THIS LEVEL.
33. PEVCO 6" 4-PORT DIVERTER ABOVE CEILING.
34. PEVCO WALL RECESSED STANDARD (1-PORT) STATION.
35. PEVCO BELLED-END 6" TUBING TRANSMISSION LINES WITH BELLED-END 48" RADIUS BENDS. (TYP)
36. (2) 6" PNEUMATIC TUBE LINES UP FROM FLOOR BELOW TO ABOVE CEILING.
37. 1-1/2" CW AND 3/4" HW DOWN.
38. 4" WASTE DOWN TO FLOOR BELOW AND 2" VENT RISE TO ABOVE CEILING. 1-1/4" CW AND 3/4" HW DOWN.
39. 6" REROUTED VENT UP FROM FLOOR BELOW, RISE TO ABOVE CEILING AND ROUTE TO NEW 6" V.T.R.

FULLY SPRINKLERED

Revisions:	Date

CONSULTANTS:

ARCHITECT/ENGINEERS: CERT. OF AUTHORITY 3722 EXP. 06/30/2013

BENHAM / ELLERBE BECKET

Drawing Title	PLUMBING EIGHTH FLOOR PLAN
Approved: Project Director	
Project Title	OKC VA MEDICAL CENTER 8TH FLOOR SICU ADDITION
Project Number	635-406
Building Number	001
Location	OKLAHOMA CITY, OK
Date	04/01/2013
Checked	JK
Drawn	DT
Drawing Number	P-181 Dwg. — of —

Office of Construction and Facilities Management

Department of Veterans Affairs

VA FORM 08-6231

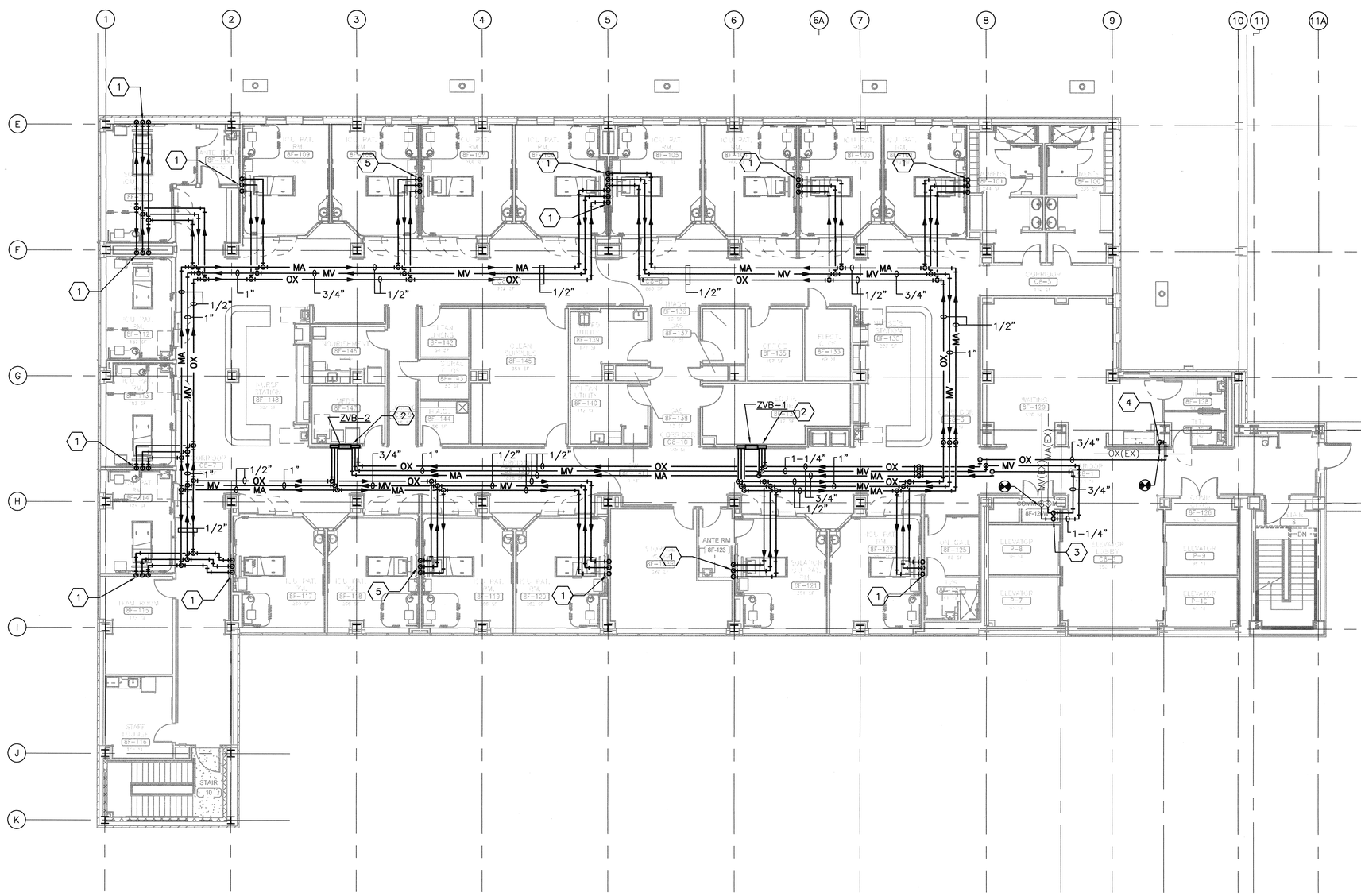

1 / P-182 EIGHTH FLOOR MEDICAL GAS PLAN
SCALE: 1/8"=1'-0"

NORTH PLAN

KEYED NOTES:

1. 1/2" OX, MV AND MA DOWN TO HEAD WALL.
2. CONNECT 1" VACUUM, 1/2" MA AND OX TO ZONE VALVE BOX. SEE DETAIL 4/P-501 FOR CONNECTIONS. PROVIDE ZVB-1&2 (TRIPLEX ZONE VALVE BOX) OHIO MEDICAL CORPORATION MODEL# 261903.
3. ROUTE 1-1/4" MV AND 3/4" MA DOWN IN CHASE TO FLOOR BELOW AND CONNECT TO EXISTING WHERE INDICATED. FIELD VERIFY EXACT LOCATION.
4. ROUTE 3/4" OX DOWN IN CHASE TO FLOOR BELOW AND CONNECT TO EXISTING WHERE INDICATED. FIELD VERIFY EXACT LOCATION.
5. 1/2" OX, MV AND MA DOWN TO HEAD WALL AT BOTH BEDS.

FULLY SPRINKLERED

Revisions	Date

CONSULTANTS:

ARCHITECT/ENGINEERS: CERT. OF AUTHORITY 3722 EXP. 06/30/2013

BENHAM / ELLERBE BECKET

Drawing Title: PLUMBING EIGHTH FLOOR MEDICAL GAS PLAN

Approved: Project Director

Project Title: OKC VA MEDICAL CENTER 8TH FLOOR SICU ADDITION

Location: OKLAHOMA CITY, OK

Date: 04/01/2013 | Checked: JK | Drawn: DT

Project Number: 635-406

Building Number: 001

Drawing Number: P-182

Dwg. — of —

Office of Construction and Facilities Management

Department of Veterans Affairs

VA FORM 08-6231

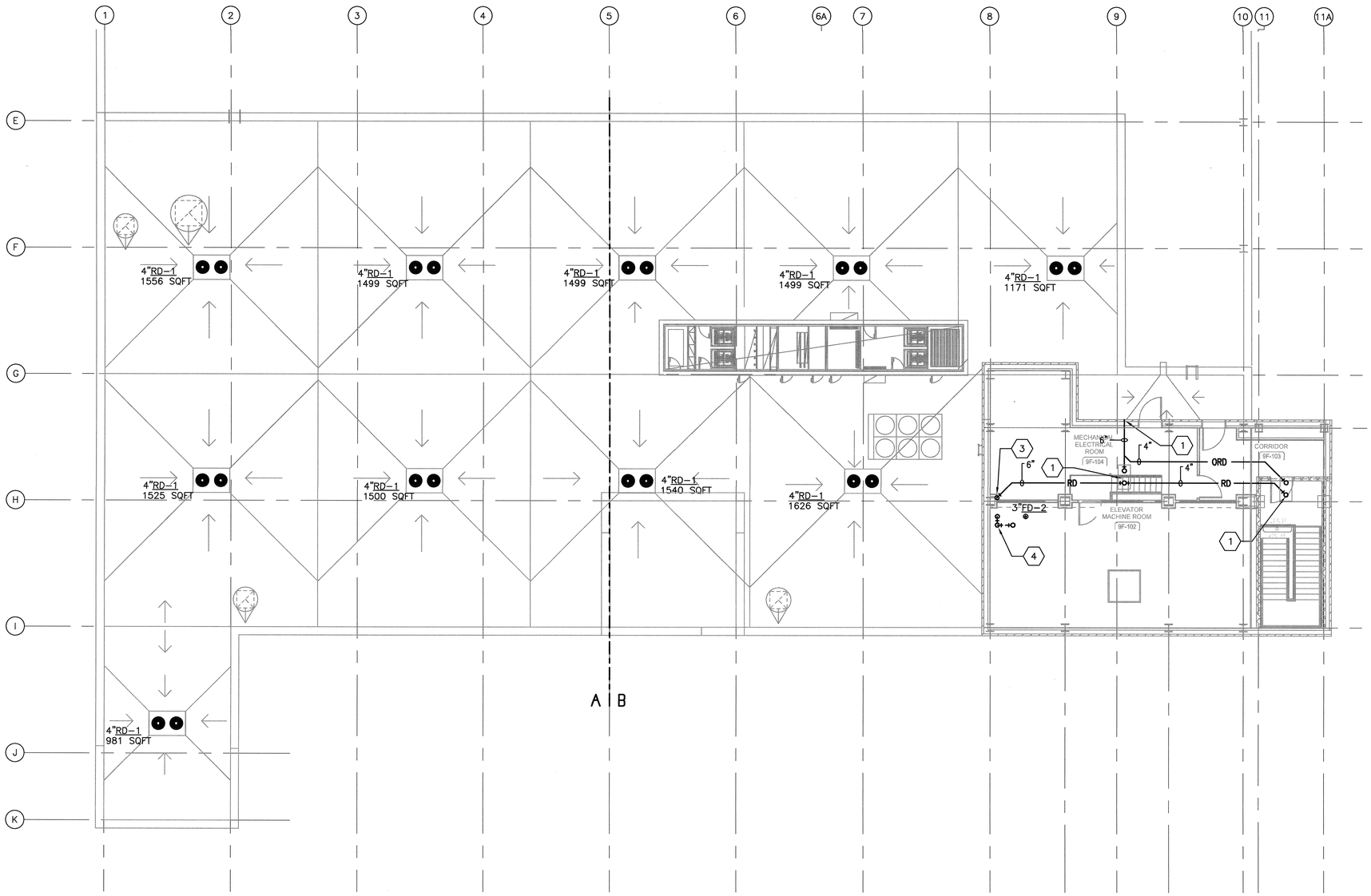

1 P-191 ROOF PLAN
SCALE: 1/8"=1'-0"

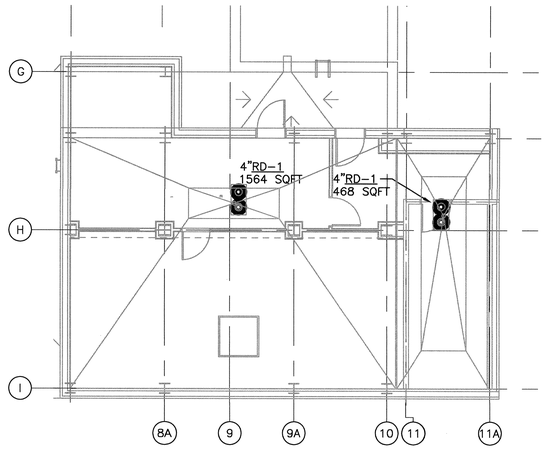

2 P-191 ELEVATOR AND STAIR ROOF PLAN
SCALE: 1/8"=1'-0"

KEYED NOTES:

1. 4" STORM AND OVERFLOW DRAINS FROM ABOVE.
2. TERMINATE WITH 6" DOWNSPOUT NOZZLE ZURN MODEL# Z199 ABOVE CEILING. ALL DOWNSPOUT NOZZLES SHALL BE MOUNTED AT THE SAME CENTERLINE ELEVATION ON THIS LEVEL.
3. 6" STORM DRAIN DOWN TO FLOOR BELOW.
4. (2) 2" VENT LINES UP FROM FLOOR BELOW, CONNECT AND RISE WITH (1) 2" VENT TO V.T.R.

FULLY SPRINKLERED

Revisions	Date

CONSULTANTS:

ARCHITECT/ENGINEERS: CERT. OF AUTHORITY 3722 EXP. 06/30/2013

BENHAM / ELLERBE BECKET

Drawing Title: PLUMBING ROOF PLAN

Approved: Project Director

Project Title: OKC VA MEDICAL CENTER 8TH FLOOR SICU ADDITION

Location: OKLAHOMA CITY, OK

Date: 04/01/2013 | Checked: JK | Drawn: DT

Project Number: 635-406

Building Number: 001

Drawing Number: P-191

Dwg. — of —

Office of Construction and Facilities Management

Department of Veterans Affairs

VA FORM 08-6231

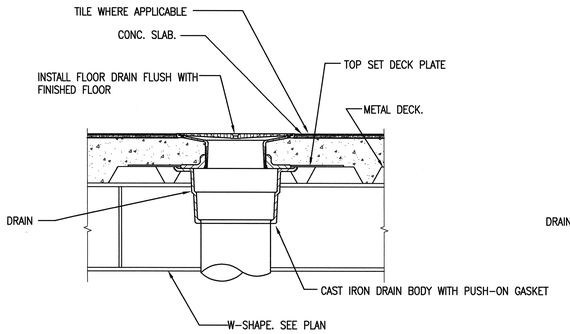

1 FINISHED FLOOR DRAIN IN EXISTING SLAB
NTS

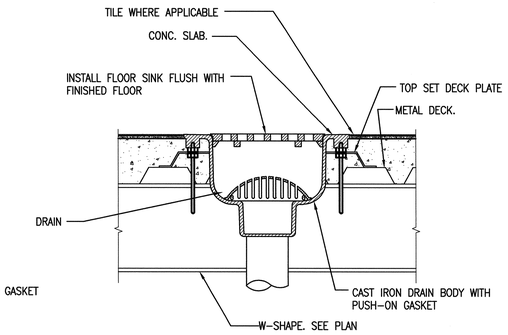

2 FLOOR SINK DETAIL
NTS

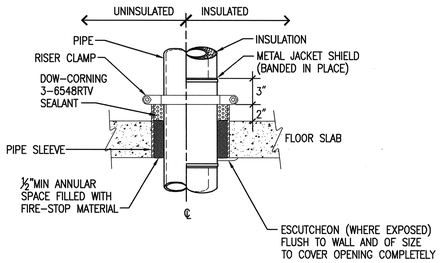

3 TYPICAL PIPE THRU EXISTING FLOOR
NTS

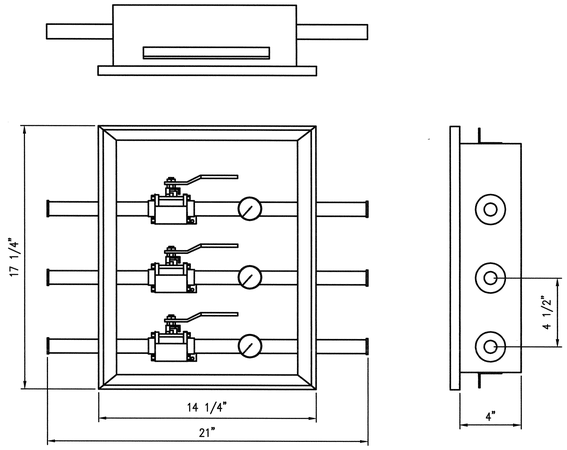

NOTE:
1. THE 2" FULL PORT VALVE AND LARGER VALVES REQUIRE A 6-1/2" DEEP BOX.
2. 1-1/2" VALVES AND LARGER WILL HAVE AN EMPTY SPACE ABOVE THE VALVE. EXAMPLE: A BOX WITH A 1/2", 3/4" AND 1-1/2" VALVE WILL REQUIRE A 4 HOLE BOX, NOT A 3 HOLE BOX.

4 ZONE VALVE BOX DETAIL
NTS

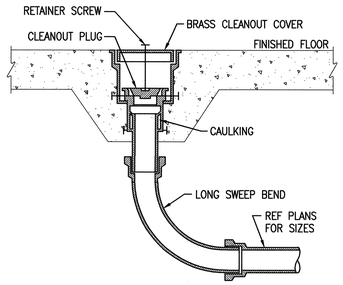

5 TYPICAL INTERIOR CLEANOUT DETAIL
NTS

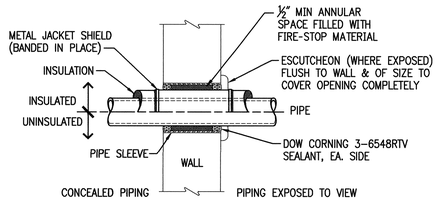

NOTE: SUPPORT PIPE INDEPENDENTLY OF SLEEVE AND WALL. CENTER PIPE AND INSULATION IN SLEEVE.

6 TYPICAL PIPE THRU WALL
NTS

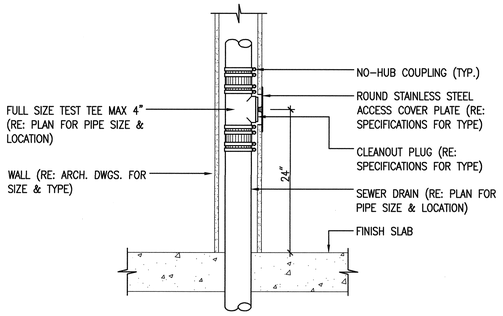

7 TYPICAL WALL CLEANOUT
NTS

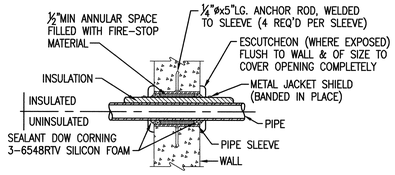

PIPE & INSULATION TO BE CENTERED IN SLEEVE.
PIPE NOT TO BE SUPPORTED BY SLEEVE.

8 PIPE THRU INTERIOR CONCRETE WALL
NTS

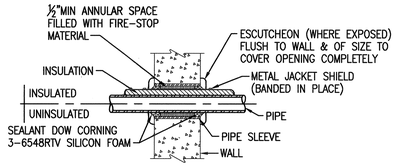

PIPE & INSULATION TO BE CENTERED IN SLEEVE.
PIPE NOT TO BE SUPPORTED BY SLEEVE.

9 PIPE THRU EXISTING INTERIOR CONCRETE WALL
NTS

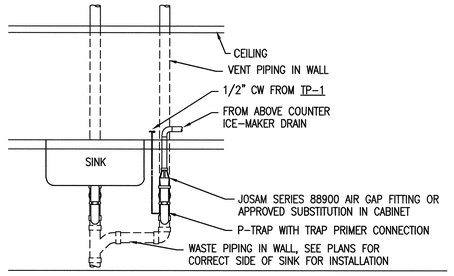

10 INDIRECT DRAIN CONNECTION AT SINK
NTS

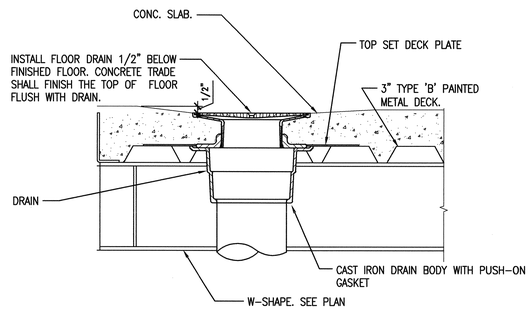

11 ELEVATOR PIT FLOOR DRAIN DETAIL
NTS

FULLY SPRINKLERED

Revisions	Date

CONSULTANTS:

ARCHITECT/ENGINEERS: CERT. OF AUTHORITY 3722 EXP. 06/30/2013

BENHAM / ELLERBE BECKET

Drawing Title: PLUMBING DETAILS

Approved: Project Director

Project Title: OKC VA MEDICAL CENTER 8TH FLOOR SICU ADDITION

Location: OKLAHOMA CITY, OK

Date: 04/01/2013 | Checked: JK | Drawn: DT

Project Number: 635-406

Building Number: 001

Drawing Number: P-501

Dwg. — of —

Office of Construction and Facilities Management

Department of Veterans Affairs

VA FORM 08-6231

PLUMBING FIXTURE SCHEDULE

MARK	DESCRIPTION	MANUFACTURER/ MODEL	MOUNTING	COLOR OR FINISH	NOMINAL SIZE	PIPING ROUGH-IN W (IN)	V (IN)	CW (IN)	HW (IN)	VALVE OR FAUCET MANUF./MODEL NO.	DRAIN TYPE MANUF./MODEL NO.	NOTES
P101	WATER CLOSET	AMERICAN STANDARD/3351.001	WALL	WHITE	---	4	2	1-1/4	-	SLOAN/ROYAL 111-1.28	---	2,10
P102	WATER CLOSET - HC	AMERICAN STANDARD/3351.001	WALL	WHITE	---	4	2	1-1/4	-	SLOAN/ROYAL 111-1.28	---	1,2,10
P202	URINAL - HC	AMERICAN STANDARD/6590.525	WALL	WHITE	---	2	2	3/4	-	SLOAN/ROYAL 186-0.13	---	10
P401	LAVATORY - HC	AMERICAN STANDARD/0419.444EC	COUNTER	WHITE	---	2	2	1/2	1/2	AMERICAN STANDARD/6500.175	---	-
P402	LAVATORY - HC	AMERICAN STANDARD/4869.008	WALL	WHITE	---	2	2	1/2	1/2	AMERICAN STANDARD/6500.175	---	-
P403	LAVATORY - HC	AMERICAN STANDARD/0571.000	COUNTER	WHITE	---	2	2	1/2	1/2	CHICAGO/786-TWCP	---	14
P404	LAVATORY - HC	AMERICAN STANDARD/4869.008	WALL	WHITE	---	2	2	1/2	1/2	CHICAGO/786-TWCP	---	14
P501	SERVICE SINK	AMERICAN STANDARD/9512.013	WALL	WHITE	---	4	2	1-1/4	3/4	ZURN/Z5410.005.46.00	---	-
P502	MOP SINK	FIAT/TSB 3000	WALL	WHITE	---	2	2	3/4	3/4	AMERICAN STANDARD/8354.112	FIAT/1453-BB	8
P508	SOIL/CLEAN UTILITY SINK	INTEGRAL W/COUNTER BY ARCH.	COUNTER	---	---	2	2	1/2	1/2	AMERICAN STANDARD/4275.550	ELKAY/LK-99	3,11
P509	NURSE'S SINK	AMERICAN STANDARD/4869.004	COUNTER	ST. STL.	19.5x19	2	2	1/2	1/2	AMERICAN STANDARD/7500.170	ELKAY/LK-99	3,11
P510	SINGLE COMPARTMENT SINK	ELKAY/LRAD 1918	COUNTER	ST. STL.	19.5x19	2	2	1/2	1/2	AMERICAN STANDARD/4275.550	ELKAY/LK-99	3,11
P511	SINGLE COMPARTMENT KITCHEN SINK	ELKAY/LRAD 1918	COUNTER	ST. STL.	19.5x19	2	2	1/2	1/2	AMERICAN STANDARD/4275.550	ELKAY/LK-99	3,11
P604	DRINKING FOUNTAIN - HC	ELKAY/LNTEM8K	WALL	ST. STL.						-		-
P701	SHOWER - HC	SYMMONS/1-25-FSB	WALL	---	---	2	2	3/4	3/4	-	---	12
PCU	***PATIENT CARE UNIT	BY ARCHITECT	---	---	---	4	2	1-1/4	1/2	-	---	-
IMB-1	ICE-MAKER BOX	SPECIALTY PRODUCTS/OB-504	---	---	---	2	2	1/2	1/2	-	---	-
TP-1	TRAP PRIMER	MIFAB/MR500	-	BRASS	-	2	2	1/2	-	-	---	-
TP-2	TRAP PRIMER W/DISTRIBUTION UNIT	MIFAB/MR500	-	BRASS	-	-	-	1/2	-	-	---	-
HB-1	HOSE BIBB	WOODFORD/24	WALL	CHROME	-	-	-	3/4	-	-	---	7
FCO	FLOOR CLEANOUT	ZURN/1400	FLOOR	CHROME	-	-	-	-	-	-	---	9

NOTES:

1. SEE MANUFACTURER'S RECOMMENDATIONS FOR ADA MOUNTING HEIGHT.
2. PROVIDE WITH CHURCH NO. 9500C, OPEN FRONT, LESS COVER.
3. CROSS HANDLE ANGLE STOPS AND CAST BRASS P-TRAP.
4. EXPOSED PIPE AND FITTINGS INSULATED PER ADA STANDARDS.
5. PROVIDE OFFSET P-TRAP PER ADA STANDARDS.
6. PROVIDE FAUCET HANDLES PER ADA STANDARDS.
7. PROVIDE WITH TEE KEY CONNECTION.
8. PROVIDE WITH STAINLESS STEEL WALL GUARD AND FIAT 832-AA HOSE AND HOSE BRACKET.
9. PROVIDE Z1400 FOR UNFINISHED FLOOR AND ZN1400 FOR FINISHED FLOOR AREAS.
10. AUTOMATIC HARD WIRED FLUSH VALVE.
11. GOOSENECK FAUCET WITH WRISTBLADE HANDLES.
12. PROVIDE AT FLOW OF 2.0 GPM.
13. PROVIDE WITH INSINKERATOR MODEL BADGER 1 DISPOSAL.
14. PROVIDE CHICAGO/325-CP COMBINATION PEDAL BOX.
15. *** (DEDUCT ALTERNATE) IN-LIEU-OF PCU, PROVIDE AMERICAN STANDARD 3461.001 WATER CLOSET W/SLOAN 111-1.28 FLUSH VALVE AND P404 LAVATORY.

PLUMBING DRAIN SCHEDULE

MARK	DESCRIPTION	TYPE	BODY MATERIAL	STRAINER SIZE (IN)	STRAINER MATERIAL	STRAINER FINISH	OUTLET SIZE (IN)	MANUFACTURER/ MODEL	NOTES
FD-1	FLOOR DRAIN	FLOOR	CAST IRON	SEE PLANS	NICKEL BRONZE	POLISHED	SEE PLANS	ZURN/Z415S-85 & Z400S	1,2,5,9
FD-2	FLOOR DRAIN	FLOOR	CAST IRON	SEE PLANS	BRONZE	POLISHED	SEE PLANS	ZURN/Z415B-108 & Z400-5B	1,2,5,9
RD-1	ROOF DRAIN	ROOF	CAST IRON	SEE PLANS	CAST IRON	-	SEE PLANS	ZURN/Z100-DP-E	1,2,9
RD-2	ROOF DRAIN	ROOF	CAST IRON	SEE PLANS	CAST IRON	-	SEE PLANS	ZURN/Z163-EA	1,5,9

NOTES:

1. SEE FLOOR PLANS FOR DRAIN SIZES
2. INVERTIBLE MEMBRANE CLAMP AND ADJUSTABLE COLLAR
3. MEDIUM DUTY SLOTTED GRATE
4. PROVIDE WITH RECESSED LIP INLET STRAINER
5. TRAP PRIMER WHERE INDICATED
6. WITH Z-1099 BACKWATER VALVE
7. ACID RESISTING EPOXY COATING
8. PROVIDE WITH DECK PLATE
9. FOR DRAINS IN METAL DECK, PROVIDE FLANGE TAPPED UNDERNEATH FOR MOUNTING DECK PLATE.
10. BOTTOM DOME STRAINER.

WATER HAMMER ARRESTOR SCHEDULE

MARK	SERVICE	TYPE	CAPACITY (FU)	PDI SIZE	NOTES
A	DOMESTIC WATER	WADE/SHOKSTOP 5	1-11	1/2"	1
B	DOMESTIC WATER	WADE/SHOKSTOP 10	12-32	3/4"	1
C	DOMESTIC WATER	WADE/SHOKSTOP 20	33-60	1"	1
D	DOMESTIC WATER	WADE/SHOKSTOP 50	61-113	1"	1
E	DOMESTIC WATER	WADE/SHOKSTOP 75	114-154	1"	1
F	DOMESTIC WATER	WADE/SHOKSTOP 100	155-330	1"	1

NOTES:

1. PISTON TYPE
2. -
3. -

FULLY SPRINKLERED

Revisions: Date

CONSULTANTS:

ARCHITECT/ENGINEERS: CERT. OF AUTHORITY 3722 EXP. 06/30/2013

BENHAM / ELLERBE BECKET

Drawing Title: PLUMBING SCHEDULES

Approved: Project Director

Project Title: OKC VA MEDICAL CENTER 8TH FLOOR SICU ADDITION

Location: OKLAHOMA CITY, OK

Date: 04/01/2013 | Checked: JK | Drawn: DT

Project Number: 635-406

Building Number: 001

Drawing Number: P-601

Dwg. — of —

Office of Construction and Facilities Management

Department of Veterans Affairs

VA FORM 08-6231

NOTE: ALL WATER HAMMER ARRESTORS NOT SHOWN IN ACCESS PANELS (AP) ARE TO BE LOCATED ABOVE CEILING IN ACCESSABLE LOCATION.

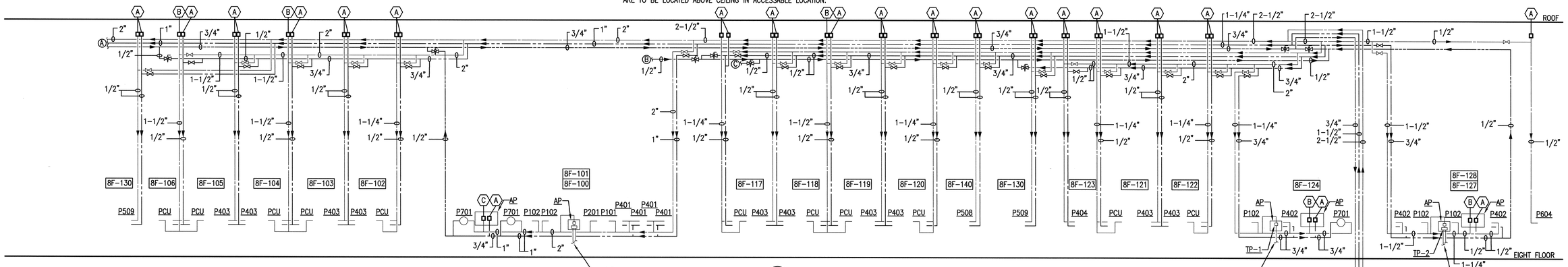

1 P-801 PLUMBING WATER RISER DIAGRAM
NTS

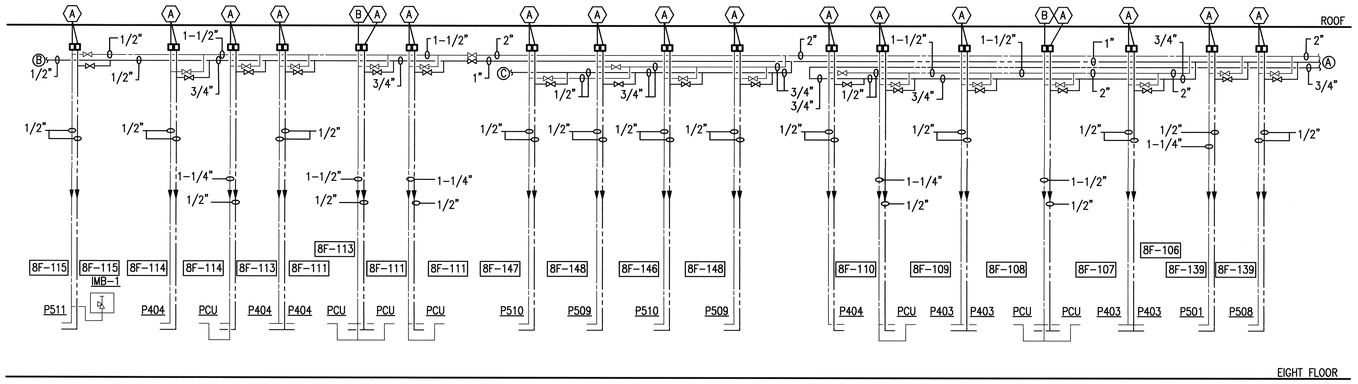

2 P-801 PLUMBING WATER RISER DIAGRAM
NTS

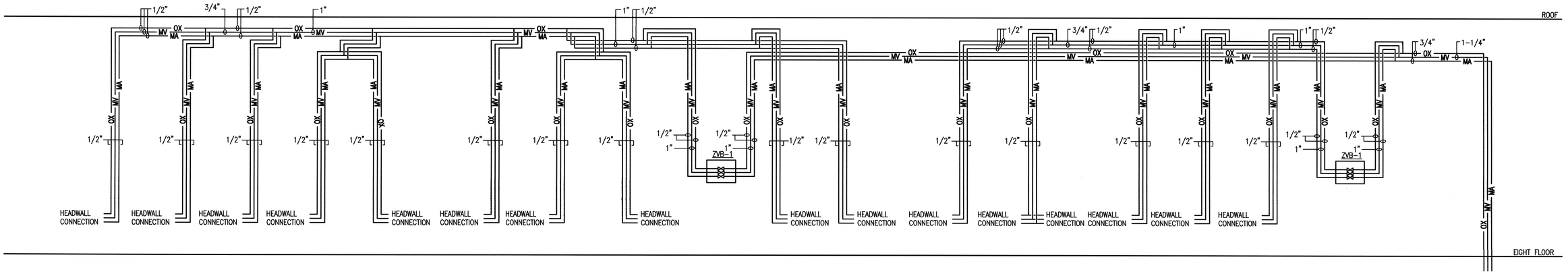

3 P-801 PLUMBING MEDICAL GAS RISER DIAGRAM
NTS

Revisions	Date

CONSULTANTS:

ARCHITECT/ENGINEERS: CERT. OF AUTHORITY 3722 EXP. 06/30/2013

BENHAM / ELLERBE BECKET

Drawing Title: PLUMBING RISER DIAGRAMS

Approved Project Director

Project Title: OKC VA MEDICAL CENTER 8TH FLOOR SICU ADDITION

Location: OKLAHOMA CITY, OK

Date: 04/01/2013 | Checked: JK | Drawn: DT

Project Number: 635-406

Building Number: 001

Drawing Number: P-801

Dwg. — of —

Office of Construction and Facilities Management

Department of Veterans Affairs

VA FORM 08-6231

ELECTRICAL SYMBOLS - POWER PLAN

- MOTOR, SINGLE-PHASE
- MOTOR, THREE-PHASE
- TRANSFORMER, PLAN
- WYE CONNECTION
- DUCT, CELL FLOOR HEADER
- DUCT, TROLLEY
- DUCT, UNDERFLOOR JUNCTION BOX
- EARTH GROUND
- JUNCTION BOX
- LADDER CABLE TRAY
- BRANCH CIRCUIT HOMERUN, LINES INDICATE NUMBER OF CIRCUITS, NEUTRAL, AND SWITCH LEG #12 CONDUCTORS. ONE SEPARATE GREEN GROUNDING CONDUCTOR SHALL BE PROVIDED FOR EACH HOMERUN; NOT SHOWN
- PULL BOX
- WIREWAY
- RIGID CONDUIT LINE = RC
- DIRECT BURIAL CABLE = DB
- POWER DUCT = P
- SUBSTATION
- HI VOLTAGE SWITCH ON CONCRETE PAD
- LOW VOLTAGE SWITCH ON CONCRETE PAD
- DUAL POWER AND TELECOMMUNICATIONS MANHOLE
- BUSWAY
- FLOOR OUTLET, DATA COMMUNICATION
- OUTLET, DATA COMMUNICATION
- PUSH BUTTON
- DISTRIBUTION PANEL
- LIGHTING PANEL
- PANELBOARD CABINET, FLUSH MOUNTED
- PANELBOARD CABINET, SURFACE MOUNTED
- RECEPTACLE, CLOCK HANGER
- RECEPTACLE, DUPLEX
- RECEPTACLE, DUPLEX ON EMERGENCY POWER
- RECEPTACLE, QUADRUPLEX, ON EMERGENCY POWER
- RECEPTACLE, DUPLEX w/GROUND FAULT CIRCUIT INTERRUPTER
- RECEPTACLE, QUADRUPLEX
- RECEPTACLE, SINGLE
- RECEPTACLE, SINGLE w/SWITCH
- RECEPTACLE, SPECIAL PURPOSE:
  A = 120V, 20A, 1 PHASE, 2-POLE, 3W, NEMA 5-20R.
  B = 208V, 20A, 1 PHASE, 2-POLE, 3W, NEMA 6-20R.
  C = 120V, 30A, 1 PHASE, 2-POLE, 3W, NEMA 5-30R.
  D = 208V, 30A, 1 PHASE, 2-POLE, 3W, NEMA 6-30R.
  E = 208V, 60A, 1 PHASE, 3-POLE, 4W, NEMA 14-60R.
  F = 208V, 30A, 3 PHASE, 3-POLE 4W, NEMA 15-30R.
  G = 208V, 50A, 3 PHASE, 3 POLE, 4W, NEMA 15-30R.
  H = 208V, 60A, 3 PHASE, 3 POLE, 4W, NEMA 15-60R.
- RECEPTACLE, SWITCHED DUPLEX
- DROP CORD, SINGLE CONVENIENCE OUTLET, 3-WIRE, GROUNDING TYPE, 20A, w/#12 CONDUCTORS IN FLEXIBLE CORD (CENTER LINE OF OUTLET: 6'-6" [1981mm] AFF. MINIMUM).
- ELECTRICAL STRIP MOLD (OUTLETS ON 2'-0" [610mm] CENTERS OR AS DESIGNATED ON DRAWINGS), MTD 3'-6" [1067mm] AFF OR AS INDICATED.
- 3-GANG COMPARTMENT BOX IN FLOOR FOR TELEPHONE, DATA & RECEPTACLE.
- RELAY; LETTER INDICATES RELAY TYPE:
  50 = INSTANTANEOUS OVERCURRENT OR RATE-OF-RISE
  51 = AC-TIME OVERCURRENT
  67 = AC-DIRECTIONAL OVERCURRENT
  86 = LOCK OUT
- DISCONNECT SWITCH
- DISCONNECT SWITCH, FUSED
- DISCONNECT SWITCH, UNFUSED
- COMBINATION MOTOR CONTROLLER FURNISHED w/EQUIPMENT
- STARTER OR MOTOR CONTROLLER
- VARIABLE FREQUENCY DRIVE
- TIME CLOCK

ELECTRICAL SYMBOLS - POWER PLAN

- POTHEAD
- STRESS CONE
- RECTIFIER, CATHODIC PROTECTION SANITARY
- VENTILATOR OR FAN COIL UNIT OUTLET
- CONDUIT TERMINATED 6" [152mm] AFF IN STANDARD BOX FOR EXTENSION TO EQUIPMENT AS DIRECTED.
- CONDUIT TERMINATED w/COUPLING (FLUSH w/FINISHED FLOOR) FOR EXTENSION TO EQUIPMENT AS DIRECTED.
- SWITCH:
  F = FUSED SWITCH
  L = LOCK
  M = MANUAL MOTOR STARTING
  MP= MOTOR SNAP w/PILOT LIGHT
  PB= PUSH BUTTON STATION
  WP= WEATHER PROOF
  K = KEY OPERATED
  LM= LOW VOLTAGE MASTER
  MC= MOMENTARY CONTACT
  P = w/PILOT LIGHT(THERMAL TYPE)
  RC= REMOTE CONTROL
  X = EXPLOSION PROOF

ELECTRICAL SYMBOLS - LIGHTING PLAN

- SWITCH, CEILING MOUNTED PULL
- SWITCH:
  BLANK = SINGLE POLE
  3 = THREE-WAY
  D = DIMMER
  LV= LOW VOLTAGE
  LM= LOW VOLTAGE MASTER
  PB= PUSH BUTTON STATION
  T = TIMER OPERATED
  X = EXPLOSION PROOF
  2 = DOUBLE POLE
  4 = FOUR-WAY
  K = KEY OPERATED
  L = LOCK
  P = w/PILOT LIGH
  RC= REMOTE CONTRO
  WP= WEATHER PROOF
  Mo= OCCUPANCY SENSOR
- SWITCH, LAMP HOLDER POLE
- LIGHT FIXTURE CEILING MOUNTED
- A — LIGHT FIXTURE, SURFACE MOUNTED FLUORESCENT, 2'x4' [610x1220mm]; LETTER INDICATES TYPE.
- B — LIGHT FIXTURE, SURFACE MOUNTED FLUORESCENT, 1'x4' [305x1220mm]; LETTER INDICATES TYPE.
- C — LIGHT FIXTURE, SURFACE MOUNTED FLUORESCENT, 1'x8' [305x2439mm]; LETTER INDICATES TYPE.
- A — LIGHT FIXTURE, RECESSED FLUORESCENT, 2'x4' [610x1220mm]; LETTER INDICATES TYPE.
- B — LIGHT FIXTURE, RECESSED FLUORESCENT, 1'x4' [305x1220mm]; LETTER INDICATES TYPE.
- C — LIGHT FIXTURE, RECESSED FLUORESCENT, 1'x8' [305x2439mm]; LETTER INDICATES TYPE.
- D — LIGHT FIXTURE, FLUORESCENT EMERGENCY; LETTER INDICATES TYPE.
- E — LIGHT FIXTURE, RECESSED FLUORESCENT, 2'x2' [610x610mm]; LETTER INDICATES TYPE.
- E — LIGHT FIXTURE, SURFACE MOUNTED FLUORESCENT, 2'x2' [610x610mm]; LETTER INDICATES TYPE.
- J — LIGHT FIXTURE, STRIP/INDUSTRIAL FLUORESCENT; EMERGENCY; LETTER INDICATES TYPE.
- J — LIGHT FIXTURE, STRIP/INDUSTRIAL FLUORESCENT; LETTER INDICATES TYPE.
- LIGHT FIXTURE, WALL MOUNTED
- LIGHT SWITCH/LIGHT SWITCH 3WAY, WALL MOUNTED
- MULTI-GANG LIGHT SWITCHES, WALL MOUNTED
- LOW-VOLTAGE LIGHTING CONTROL RELAY, ABOVE CEILING MOUNTED
- LIGHTING, ONE HEAD EMERGENCY BATTERY POWER
- LIGHTING, TWO HEAD EMERGENCY BATTERY POWER
- LIGHTING, THREE HEAD EMERGENCY BATTERY POWER
- LIGHT POLE, ONE LUMINAIRE
- LIGHT POLE, TWO LUMINAIRES
- LIGHTING, EXTERIOR BUILDING
- EXIT SIGN, WALL MOUNTED w/DIRECTIONAL ARROWS AND FACES AS SHOWN
- EXIT SIGN, CEILING MOUNTED w/DIRECTIONAL ARROWS AND FACES AS SHOWN
- LIGHT FIXTURE, BOLLARD
- LIGHT FIXTURE, DIRECTIONAL
- A — LIGHT FIXTURE, SURFACE MOUNTED FLUORESCENT, 2'x4' [610x1220mm]; LETTER INDICATES TYPE. SEE FIXTURE SCHEDULE SHEET E-605.
- B — LIGHT FIXTURE, WALL MOUNTED FLUORESCENT, 1'x4' [305x1220mm];LETTER INDICATES TYPE. SEE FIXTURE SCHEDULE SHEET E-605.
- X — LIGHT FIXTURE, CEILING MOUNTED FLUORESCENT, CAN DOWN LIGHT, LETTER INDICATES TYPE. SEE FIXTURE SCHEDULE SHEET E-605.

ELECTRICAL SYMBOLS - DIAGRAM

- TRANSFORMER, DELTA CONNECTION
- MOTOR, SINGLE-PHASE
- MOTOR, THREE-PHASE
- TRANSFORMER
- WYE CONNECTION
- EARTH GROUND
- JUNCTION BOX
- PULL BOX
- PRESSURE SWITCH-CLOSE ON INCREASE
- PRESSURE SWITCH-OPEN ON INCREASE
- SWITCH, MULTIPOSITION
- FLOAT SWITCH, NORMALLY CLOSED
- FOOT OPERATED SWITCH, NORMALLY CLOSED
- LIMIT SWITCH, NORMALLY CLOSED
- TEMPERATURE ACTIVED SWITCH, NORMALLY CLOSED
- TIME DELAY SWITCH, NORMALLY CLOSED
- FLOAT SWITCH, NORMALLY OPEN
- LIMIT SWITCH, NORMALLY OPEN
- TEMPERATURE ACTIVATED SWITCH, NORMALLY OPEN
- TIME DELAY SWITCH, NORMALLY OPEN
- SINGLE BREAK SWITCH
- NORMALLY CLOSED RELAY CONTACT
- NORMALLY OPEN RELAY CONTACT
- 20A — FUSE w/RATING
- MOLDED CASE CIRCUIT BREAKER
- LOW-VOLTAGE DRAWOUT AIR CIRCUIT BREAKER
- O.C.B. — MEDIUM-VOLTAGE OIL CIRCUIT BREAKER
- MEDIUM-VOLTAGE DRAWOUT AIR CIRCUIT BREAKER
- SWITCH AND FUSE UNIT
- FUSED DRAWOUT POTENTIAL TRANSFORMER
- R50 — RELAY; LETTER INDICATES RELAY TYPE:
  50 = INSTANTANEOUS OVERCURRENT OR RATE-OF-RISE
  51 = AC-TIME OVERCURRENT
  67 = AC-DIRECTIONAL OVERCURRENT
  86 = LOCK OUT
- DISCONNECT SWITCH, FUSED
- DISCONNECT SWITCH, UNFUSED
- FUSIBLE LINK
- STARTER, COMBINATION WITH DISCONNECT SWITCH
- STARTER OR MOTOR CONTROLLER
- VFD — VARIABLE FREQUENCY DRIVE
- GENERATOR, POWER
- BATTERY
- CAPACITOR
- POTHEAD
- STRESS CONE
- LIGHTNING ARRESTOR
- RECTIFIER, CATHODIC PROTECTION
- METER
- AMMETER
- VOLTMETER
- WATTMETER
- WATT-HOUR METER

LIGHTNING PROTECTION SYMBOLS

- AIR TERMINAL
- THRU-ROOF PENETRATION
- LIGHTNING PROTECTION CABLE
- LIGHTNING PROTECTION CABLE CONNECTION

ELECTRICAL ABBREVIATIONS

1PH	SINGLE-PHASE
1P	SINGLE POLE
2/C	TWO-CONDUCTOR
3/C	THREE-CONDUCTOR
3PH	THREE-PHASE
4/C	FOUR-CONDUCTOR
4W	FOUR-WIRE
A/C UNIT	AIR CONDITIONING UNIT
A/E	ARCHITECT/ENGINEER
AAP	ALARM ANNUNCIATOR PANEL
AC	ALTERNATING CURRENT OR ARMORED CABLE
ACC	ACCESSIBLE
ADDL	ADDITIONAL
ADJ	ADJACENT, ADJOINING
ADO	AUTOMATIC DOOR OPENER
AF	AMPERE FRAME OR AMP FUSE
AFC	ABOVE FINISHED COUNTER, AUTOMATIC FREQUENCY CONTROL, OR AVAILABLE FAULT CURRENT
AFF	ABOVE FINISHED FLOOR
AFG	ABOVE FINISHED GRADE
AH	AMPERE HOUR
AHJ	AUTHORITY HAVING JURISDICTION
AIC	AMPERE INTERRUPTING CAPACITY
ALT	ALTERNATE
AMB/A	AMBIENT
AMP	AMPERE
ARCH	ARCHITECT
ASC	AMPS SHORT CIRCUIT
AT	AMPERE TRIP
ATS	AUTOMATIC TRANSFER SWITCH
AUTO	AUTOMATIC
AV	AUDIO VISUAL
BAT	BATTERY
BC	BARE COPPER
BD	BOARD
BFF	BELOW FINISH FLOOR
BIL	BASIC INSULATION LEVEL
BLDG	BUILDING
BPIP	BOILER PLANT INSTRUMENTATION PANEL
BRKR	BREAKER
BYP	BY PASS
C	CONDUIT
CAB	CABINET
CALC	CALCULATE
CAP	CAPACITY
CAT	CATALOG
CATV	COMMUNITY ANTENNA TELEVISION
CCR	CONTROL CONTACTOR
CCTV	CLOSED CIRCUIT TELEVISION
cd	CANDELA
CD	CONSTRUCTION DOCUMENTS
CF	CONTRACTOR FURNISHED
CF/CI	CONTRACTOR FURNISHED/CONTRACTOR INSTALLED
CF/OI	CONTRACTOR FURNISHED/OWNER INSTALLED
CFE	CONTRACTOR FURNISHED EQUIPMENT
CHW	CHILLED WATER
CHWP	CHILLED WATER PUMP
CKT	CIRCUIT
CKT BRKR	CIRCUIT BREAKER
CLF	CURRENT LIMITING FUSE
CLG	CEILING
CMU	CONCRETE MASONRY UNIT
COAX	COAX CABLE
COMM	COMMUNICATION
COMPT	COMPARTMENT
CONC	CONCRETE
CONT	CONTINUE
CONTR	CONTRACTOR
COORD	COORDINATE
CPT	CONTROL POWER TRANSFORMER
CRI	COLOR RENDERING INDEX
CT	CURRENT TRANSFORMER
CTV	CABLE TELEVISION
Cu	COPPER
CU FT	CUBIC FEET
CUR	CURRENT
DB	DECIBEL OR DIRECT BURIAL
DC	DIRECT CURRENT
DCP	DIMMER CONTROL PANEL
DEG C	DEGREES CELSIUS
DEG F	DEGREES FAHRENHEIT
DEMO	DEMOLITION
DIAG	DIAGRAM
DISC	DISCONNECT
DISTR	DISTRIBUTION
DISTR PNL	DISTRIBUTION PANEL
DMR SW	DIMMER SWITCH
DN	DOWN
DPDT	DOUBLE POLE, DOUBLE THROW
DPST	DOUBLE POLE, SINGLE THROW
DRSW	DOOR SWITCH
DS	DISCONNECT SWITCH
DWG	DRAWING
EC	EMPTY CONDUIT
EG	EQUIPMENT GROUND
EL	ELEVATION
ELEC	ELECTRIC OR ELECTRICAL
ELEV	ELEVATOR
EMCP	EMERGENCY MONITORING CONTROL PANEL
EMER	EMERGENCY
EMI	ELECTROMAGNETIC INTERFERENCE
EMT	ELECTRICAL METALLIC TUBING

ELECTRICAL ABBREVIATIONS

ENCL	ENCLOSURE
EPO	EMERGENCY POWER OFF
EPRF	EXPLOSION PROOF
ESMT	EASEMENT
EWC	ELECTRIC WATER COOLER
EWH	ELECTRIC WATER HEATER
EXIST	EXISTING
FA	FIRE ALARM
FAAP	FIRE ALARM ANNUNCIATOR PANEL
FABL	FIRE ALARM BELL
FABX	FIRE ALARM BOX
FACP	FIRE ALARM CONTROL PANEL
FC	FOOTCANDLE
FI	FILM ILLUMINATOR
FIXT	FIXTURE
FLA	FULL LOAD AMPS
FLEX	FLEXIBLE METALLIC CONDUIT
FLT	FLOODLIGHT
FLUOR	FLUORESCENT
FLUOR FIX	FLUORESCENT FIXTURE
FOUTT	TELEPHONE FLOOR OUTLET
FP	FIRE PROTECTION
FT	FEET OR FOOT
FU SW	FUSED SWITCH
FVNR	FULL VOLTAGE NON-REVERSING
FVR	FULL VOLTAGE REVERSING
G/GND	GROUND OR GENERATOR
GEN	GENERATOR
GFCI	GROUND FAULT CIRCUIT INTERRUPTER
GTB	GROUND TERMINAL BOX
HID	HIGH INTENSITY DISCHARGE
HOA	HAND-OFF-AUTOMATIC
HP	HORSEPOWER
HT	HEIGHT
HZ	HERTZ
IESNA	ILLUMINATION ENGINEERING SOCIETY OF NORTH AMERICA
IMC	INTERMEDIATE METAL CONDUIT
INCAND	INCANDESCENT
IR	INFRARED
IWH	INSTANTANEOUS WATER HEATER
J-BOX	JUNCTION BOX
kV	KILOVOLT
kVA	KILOVOLT AMPERE
kVAH	KILOVOLT AMPERE PER HOUR
kVAR	KILOVOLT AMPERE REACTIVE
kW	KILOWATT
kWH	KILOWATT HOUR
kWHM	KILOWATT HOUR METER
LED	LIGHT EMITTING DIODE
LF	LINEAR FEET (FOOT)
LM	LUMEN
LP	LIGHT POLE
LPS	LOW PRESSURE SODIUM
LRA	LOCKED ROTOR AMPS
LTCP	LOCAL TEMPERATURE CONTROL PANEL
LT	LIGHT
LTG	LIGHTING
LTG PNL	LIGHTING PANEL
LTNG	LIGHTNING
LV	LOW VOLTAGE
MATV	MASTER ANTENNA TELEVISION SYSTEM
MAX	MAXIMUM
MC	METAL-CLAD
MCA	MINIMUM CIRCUIT AMPS
MCB	MAIN CIRCUIT BREAKER
MCC	MOTOR CONTROL CENTER
MDP	MAIN DISTRIBUTION PANEL
MECH	MECHANICAL
MG	MOTOR GENERATOR
MH	MANHOLE
MIN	MINIMUM
MOCP	MAXIMUM OVERCURRENT PROTECTION
MLO	MAIN LUGS ONLY
MT	MOUNT
MTD	MOUNTED
MTG	MOUNTING
MTS	MANUAL TRANSFER SWITCH
MV	MEDIUM VOLTAGE
MVA	MEGAVOLT-AMPERE
MW	MEGAWATT MICROWAVE
NA	NOT APPLICABLE
NEC	NATIONAL ELECTRICAL CODE
NEMA	NATIONAL ELECTRICAL MANUFACTURERS ASSOCIATION
N/NEUT	NEUTRAL
NFPA	NATIONAL FIRE PROTECTION ASSOCIATION
NIC	NOT IN CONTRACT
NL	NIGHT LIGHT
NO	NORMALLY OPEN
NS	NO SCALE
NTS	NOT TO SCALE
OC	ON CENTER
OD	OUTSIDE DIAMETER
OL	OVERLOAD

ELECTRICAL ABBREVIATIONS

P	POLE
PA	PUBLIC ADDRESS
PB	PANELBOARD, PULL BOX, OR PUSHBUTTON
PBPU	PREFABRICATED BEDSIDE PATIENT UNIT
PCB	POLYCHLORINATED BIPHENYL
PEC	PHOTOELECTRIC CELL
PED	PEDESTAL
PEND	PENDANT
PF	POWER FACTOR
PH/Ø	PHASE
PNL	PANEL
POD	POWER OPERATED DAMPER
PT	POTENTIAL TRANSFORMER
PTRV	POWER TYPE ROOF VENTILATION
PVC	POLYVINYL CHLORIDE (PLASTIC)
PWR	POWER
RCP	REFLECTED CEILING PLAN
REC	RECESSED
RECPT	RECEPTACLE
RGS	RIGID GALVANIZED STEEL
RM	ROOM
RMS	ROOT MEAN SQUARE
REQD	REQUIRED
SCC	SHORT CIRCUIT CAPACITY
SES	SERVICE ENTRANCE SECTION
SD	SMOKE DETECTOR
SF	SQUARE FOOT (FEET)
SHT	SHEET
SI	INTERNATIONAL SYSTEM OF UNITS
SPEC	SPECIFICATION
SPST	SINGLE POLE, SINGLE THROW
SURF	SURFACE
SW	SWITCH
SWBD	SWITCHBOARD
SWGR	SWITCHGEAR
TC	TIME CLOCK
TEL	TELEPHONE
TP	TWISTED PAIR
TPS	TWISTED PAIR SHIELDED
TTB	TELEPHONE TERMINAL BOARD
TV	TELEVISION
TYP	TYPICAL
UFD	UNDERFLOOR DUCT
UGND	UNDERGROUND
UL	UNDERWRITERS LABORATORY
UON	UNLESS OTHERWISE NOTED
UPS	UNINTERRUPTIBLE POWER SUPPLY
UTIL	UTILITY
V	VOLT
VA	VOLT AMPERE
VAR	VOLT AMPERE REACTIVE
VFD	VARIABLE FREQUENCY DRIVE
VOLT	VOLTAGE
w/	WITH
W	WATT
WH	WATER HEATER
WP	WEATHERPROOF
XFER	TRANSFER
XFMR	TRANSFORMER

FULLY SPRINKLERED

Revisions	Date

CONSULTANTS:

REGISTERED PROFESSIONAL ENGINEER — DOYLE W. MAGNUS — OKLAHOMA — 21201

ARCHITECT/ENGINEERS: CERT. OF AUTHORITY 3722 EXP. 06/30/2013

BENHAM / ELLERBE BECKET

Drawing Title	ELECTRICAL LEGEND AND ABBREVIATIONS
Approved Project Director	
Project Title	OKC VA MEDICAL CENTER 8TH FLOOR SICU ADDITION
Location	OKLAHOMA CITY, OK
Date	04/01/2013
Checked	JS
Drawn	NS
Project Number	635-406
Building Number	001
Drawing Number	E001
Dwg. -- of --	

Office of Construction and Facilities Management

Department of Veterans Affairs

VA FORM 08-6231

File name: P:\OKCA\635\05100\300_dkcnamedisc\20_DESIGN\40_CAD\E\E00\E-001.dwg
Date: April 1, 2013 - 1:50pm
User: SAMPSONNJ

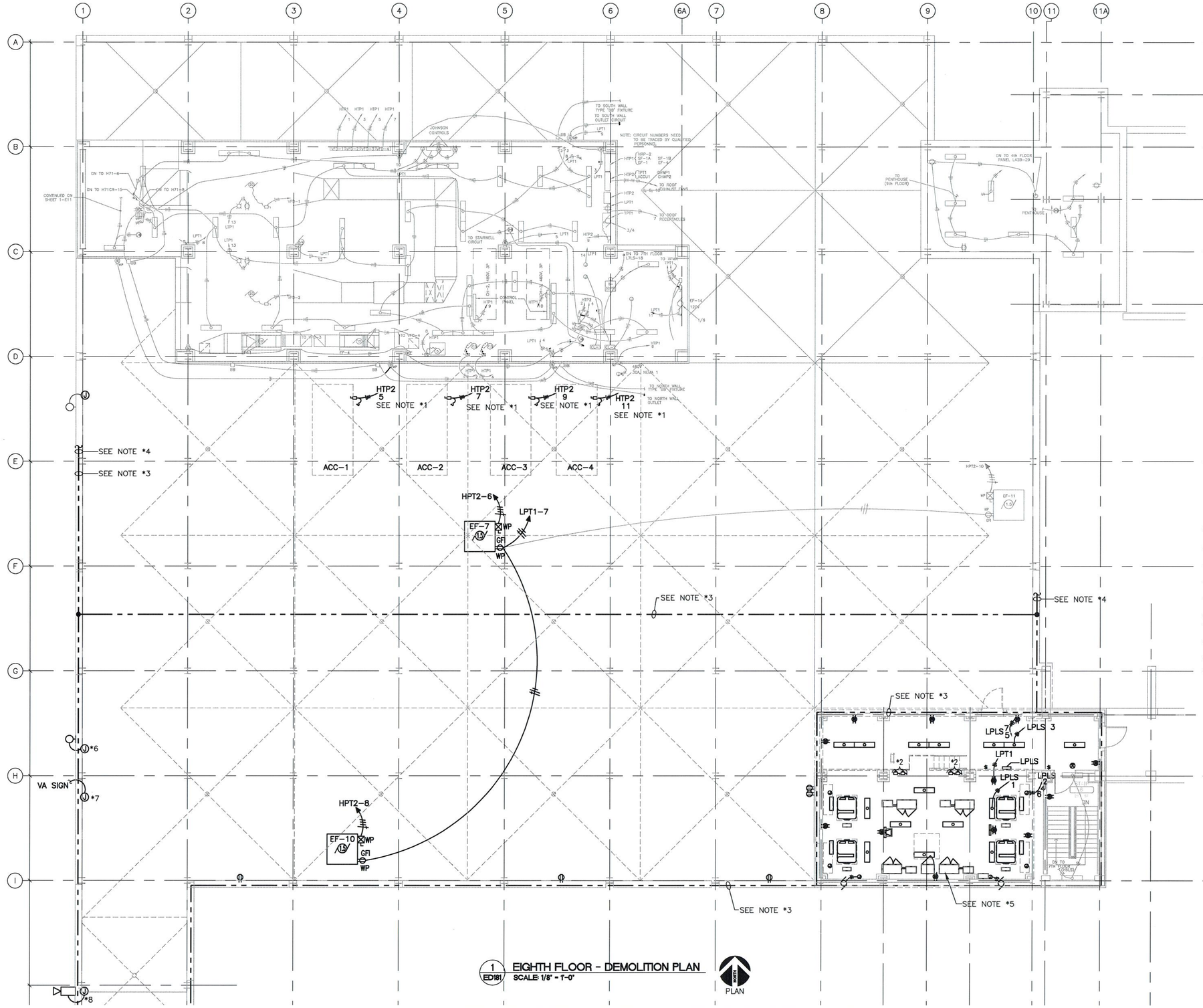

1 ED181 EIGHTH FLOOR - DEMOLITION PLAN
SCALE: 1/8" = 1'-0"

PLAN

GENERAL NOTES:

1. DEVICES, EQUIPMENT, OR FIXTURES TO BE DEMOLISHED ARE INDICATED BY BOLD LINE WEIGHT. SCREENED TEXT AND EQUIPMENT DENOTES EXISTING TO REMAIN.
2. CONSULT WITH OWNER'S REPRESENTATIVE FOR DISPOSAL OF ALL MATERIALS AND EQUIPMENT REMOVED AND NOT SHOWN TO BE REUSED.
3. VERIFY ALL CIRCUITS BEFORE DISCONNECTION AND REMOVAL FOR DEMOLITION.
4. WHERE REMOVAL OF EQUIPMENT INTERRUPTS CIRCUITING TO OTHER REMAINING EQUIPMENT EXTEND CIRCUIT OR PROVIDE NEW CIRCUIT TO MAINTAIN OPERATION OF EXISTING EQUIPMENT.
5. ALL CIRCUITS NOT TO BE REUSED SHALL BE REMOVED FROM DEVICE BACK TO PANELBOARD OR POWER SOURCE. PANELBOARD SCHEDULES SHALL BE UPDATED ACCORDINGLY.
6. WHERE CIRCUITS ARE TO BE REUSED TO POWER NEW EQUIPMENT OR DEVICE, REMOVE EXISTING CONDUIT TO NEAREST JBOX AND PROVIDE NEW CONDUIT AND CONDUCTORS FROM JBOX TO NEW EQUIPMENT OR DEVICE.

KEYED NOTES:

*1. REMOVE EXISTING FEEDER TO EACH ACC UNIT AND REWIRE FROM NEW LOCATION TO EXISTING PANEL AS SHOWN ON SHT. E-191.
*2. EXISTING DISCONNECT SWITCHES TO ELEVATORS FED FROM PANEL "HBE" LOCATED IN ELEVATOR EQUIPMENT ROOM BG-101, REMOVE CONDUIT BELOW SLAB AND EXTEND TO NEW ELEVATOR MACHINE ROOM 9F-101 ON ROOF. RELOCATE DISCONNECT SWITCHES TO NEW LOCATION. REFER TO SHT. E-191.
*3. REMOVE EXISTING LIGHTNING PROTECTION CABLES, AIR TERMINALS AND ACCESSORIES.
*4. RECONNECT REMAINING LIGHTNING PROTECTION SYSTEM TO NEW LIGHTNING PROTECTION SYSTEM AS SHOWN ON SHT. E-192.
*5. COORDINATE DEMOLITION OF ELEVATOR EQUIPMENT WITH ELEVATOR CONTRACTOR.
*6. REMOVE EXISTING LIGHT FIXTURE AND REWIRE TO NEW LOCATION AS SHOWN ON SHEET E-191 AND KEYED NOTE *4.
*7. EXISTING "VA" SIGNAGE TO REMAIN. RELOCATE CIRCUIT AS NEEDED TO KEEP THE SIGNAGE IN OPERATION.
*8. EXISTING CAMERA TO BE RELOCATED AND REWIRED ON NEW ROOF, AS SHOWN ON SHT. E-191.

8' 4' 0 8' 16' 24'
SCALE IN FEET (1/8"=1'-0")

FULLY SPRINKLERED

Revisions	Date

CONSULTANTS:

REGISTERED PROFESSIONAL ENGINEER DOYLE W. MAGNUS 21231 OKLAHOMA 4/1/13

ARCHITECT/ENGINEERS: CERT. OF AUTHORITY 3722 EXP. 06/30/2013

BENHAM / ELLERBE BECKET

Drawing Title	ELECTRICAL EIGHTH FLOOR - DEMOLITION PLAN
Approved Project Director	
Project Title	OKC VA MEDICAL CENTER 8TH FLOOR SICU ADDITION
Location	OKLAHOMA CITY, OK
Date	04/01/2013
Checked	JS
Drawn	NS
Project Number	635-406
Building Number	001
Drawing Number	ED181
Dwg.	-- of --

Office of Construction and Facilities Management

Department of Veterans Affairs

VA FORM 08-6231

GENERAL NOTES:
1. NEW WORK IS INDICATED BY BOLD LINE WEIGHT, EXISTING EQUIPMENT IS INDICATED BY SCREENED LINE WEIGHT.

KEYED NOTES:
*1. PROVIDE NEW G.E. SWITCHGEAR SECTION WITH (2) TWO 800A. DRAW-OUT TYPE AKR-7D-30H CIRCUIT BREAKERS AND MICRO VERSE TRIP 800A. TO MATCH EXISTING UNIT.
*2. EXTEND 2-4" CONDUITS TO NEW ATS-11 AND NEW ATS-12.

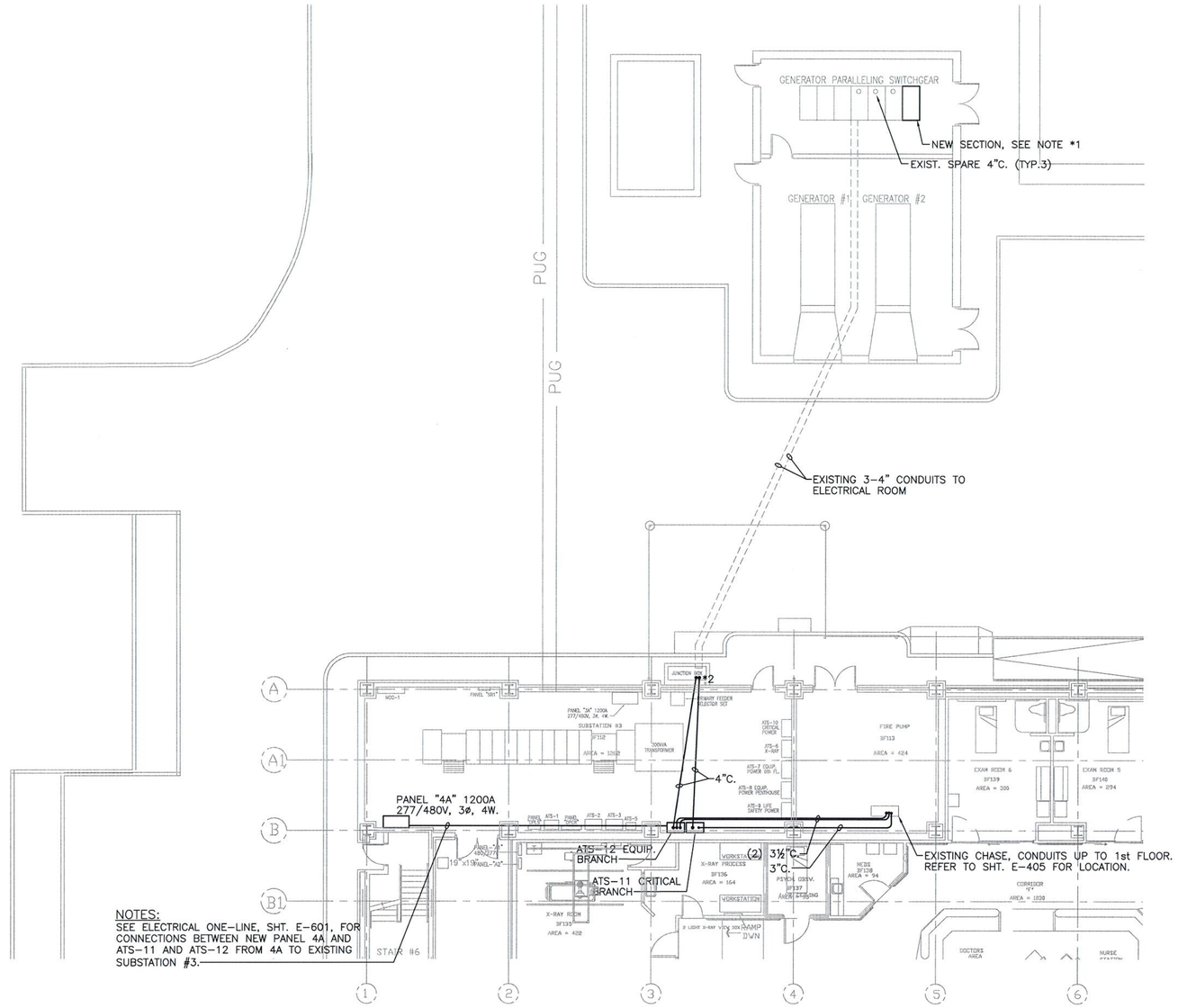

NOTES:
SEE ELECTRICAL ONE-LINE, SHT. E-601, FOR CONNECTIONS BETWEEN NEW PANEL 4A AND ATS-11 AND ATS-12 FROM 4A TO EXISTING SUBSTATION #3.

1 ES100 ELECTRICAL SITE PLAN
SCALE: 1/8" = 1'-0"

NORTH PLAN

8' 4' 0 8' 16' 24'
SCALE IN FEET (1/8"=1'-0")

FULLY SPRINKLERED

Revisions	Date

CONSULTANTS:

REGISTERED PROFESSIONAL ENGINEER DOYLE W. MAGNUS 21221 STATE OF OKLAHOMA 04/01/13

ARCHITECT/ENGINEERS: CERT. OF AUTHORITY 3722 EXP. 06/30/2013
BENHAM / ELLERBE BECKET

Drawing Title	ELECTRICAL SITE PLAN
Approved: Project Director	
Project Title	OKC VA MEDICAL CENTER 8TH FLOOR SICU ADDITION
Location	OKLAHOMA CITY, OK
Date	04/01/2013
Checked	JS
Drawn	SLS
Project Number	635-406
Building Number	001
Drawing Number	ES100
Dwg. — of —	

Office of Construction and Facilities Management
Department of Veterans Affairs

VA FORM 08-6231

File name: P:\OKC\MEL6635109-4300_oklcvamedsicu\20_DESIGN\40_CAD\E\004\ES100.dwg
Date: April 1, 2013 - 1:37pm
User: SMIPSONNJ

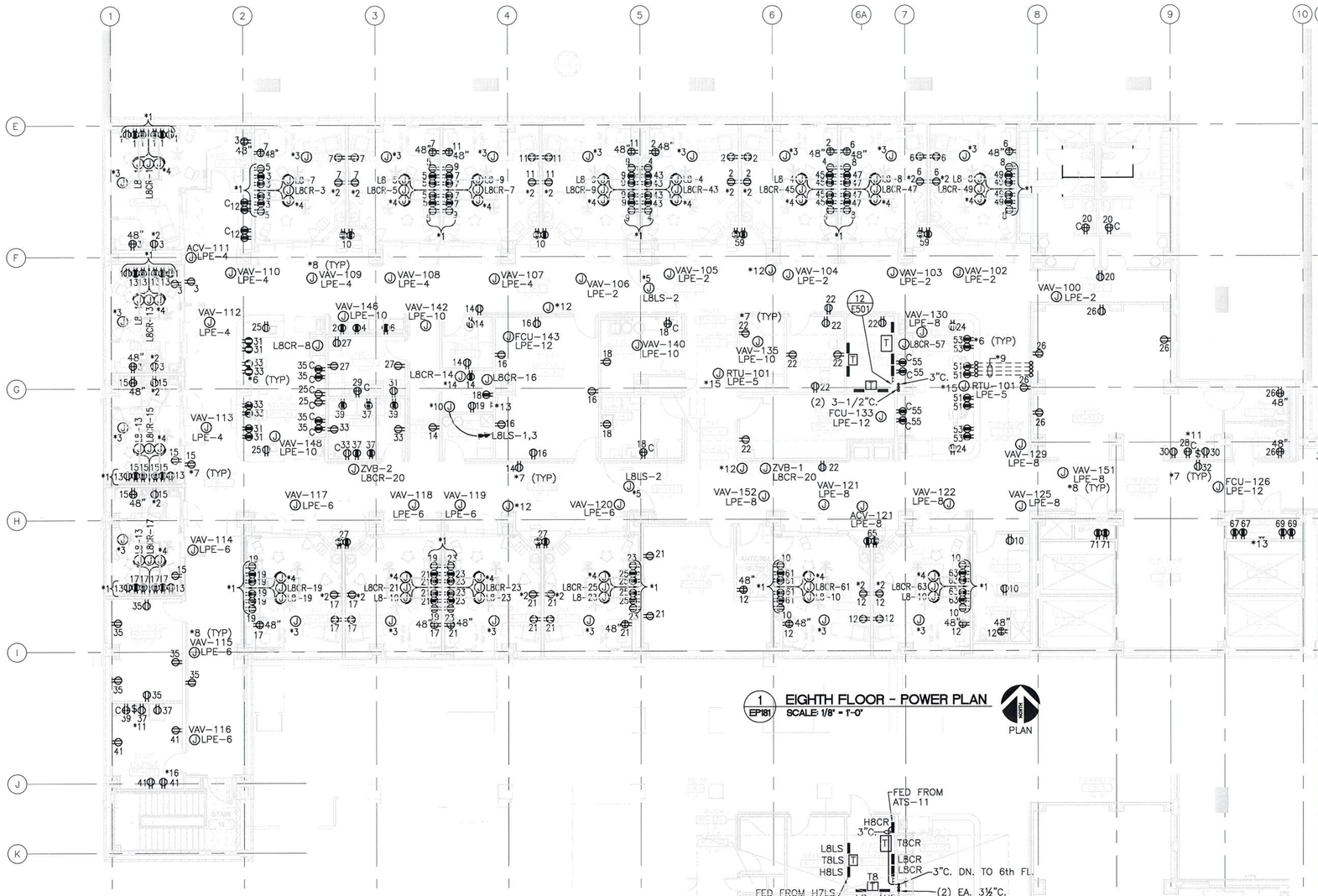

1 EIGHTH FLOOR - POWER PLAN
EP181 SCALE: 1/8" = 1'-0"

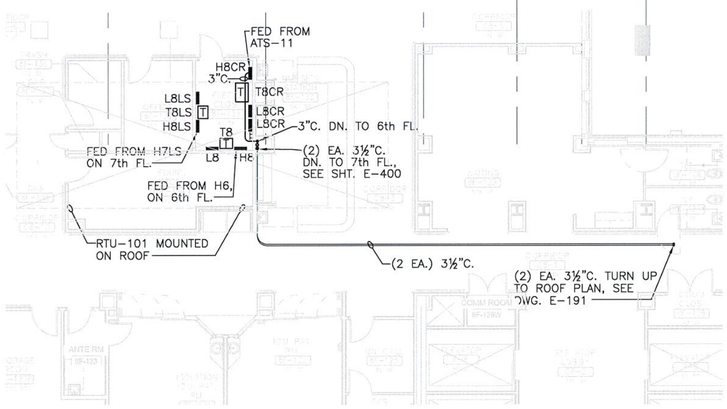

2 DETAIL - ELECTRIC ROOM 8F-133
EP181 SCALE: 1/8" = 1'-0"

GENERAL NOTES:

1. NEW DEVICES, EQUIPMENT, OR FIXTURES ARE INDICATED BY BOLD LINE WEIGHT. SCREENED TEXT AND EQUIPMENT DENOTES EXISTING TO REMAIN.
2. ALL CONDUIT SHALL BE CONCEALED IN WALLS OR ABOVE CEILING.
3. ALL CONDUCTORS TO RECEPTACLE CIRCUITS SHALL BE #12 AWG MINIMUM. RUN NO MORE THAN THREE CIRCUITS PER HOMERUN.
4. WHERE AN EXISTING CIRCUIT IS BEING RE-USED, EXTEND CIRCUIT TO NEW DEVICE FROM NEAREST JBOX USING NEW WIRE AND CONDUIT.
5. BOLD NUMBER BESIDE RECEPTACLES OR JBOX DENOTES PANELBOARD AND OR CIRCUIT NUMBER.

KEYED NOTES:

*1. HEADWALL SYSTEMS. RECEPTACLES LOCATED IN HEADWALL. REFER TO SHEET AS710 FOR ADDITIONAL DETAILS.
*2. TV RECEPTACLE. COORDINATE WIRING WITH BED REMOTE CONTROL RELAY ABOVE CEILING. REFER TO ARCH. DWGS. FOR MOUNTING HEIGHT.
*3. JBOX ABOVE CEILING FOR CONNECTION TO PATIENT LIFT. WIRE TO CIRCUIT INDICATED.
*4. POWER AND CONTROL JBOXES ON WALL. COORDINATE EXACT LOCATION WITH HEADWALL AND BED LOCATOR SUPPLIER. PROVIDE 1" CONDUIT FROM EACH JBOX TO HEADWALL AND FROM HEADWALL TO ACCESIBLE CEILING FOR CONNECTION TO RECEPTACLES ON BED LOCATORS AND BED CONTROL DEVICES FOR TV, PATIENT LIGHT, ETC. REFER TO SHT. AS710.
*5. 120V POWER TO DOOR OPERATOR.
*6. CONNECT RECEPTACLES ON EMERGENCY POWER TO CIRCUIT INDICATED IN PANELBOARD L8CR.
*7. CONNECT RECEPTACLES ON NORMAL POWER TO CIRCUIT INDICATED IN PANELBOARD L8.
*8. CONNECT MISCELLANEOUS DEVICES AND EQUIPMENT, SUCH AS VAV's, RECEPTACLES FOR BED LOCATORS, FIRE ALARM PANELS, ETC. TO PANELBOARD AND CIRCUIT INDICATED.
*9. CONDUITS ABOVE THE CEILING AND DOWN TO NURSE STATION CABINETS. RUN 4-1" CONDUITS, TWO FOR POWER AND TWO SPARES.
*10. FIRE ALARM CONTROL PANEL CIRCUITS.
*11. SWITCH ABOVE COUNTER TOP WIRED TO RECEPTACLE BELOW SINK FOR GARBAGE DISPOSAL.
*12. PROVIDE A 4"x4" BOX AT 48" AFF AND 3/4" CONDUIT TO ABOVE CEILING FOR DOOR OPERATOR PUSHBUTTON.
*13. SEE COMMUNICATION DRAWING 1-EY501, DETAIL 7 FOR TELECOM GROUNDING BUSBAR.
*14. DEDICATED CIRCUIT TO NURSE CALL SYSTEM, SEE COMMUNICATION DRAWING 1-EY108.
*15. CIRCUIT FOR RTU-101 SMOKE DAMPERS CONTROL.
*16. TV RECEPTACLE, REFER TO ARCH. DWGS. FOR MOUNTING HEIGHT.

8' 4' 0 8' 16' 24'
SCALE IN FEET (1/8"=1'-0")

FULLY SPRINKLERED

Revisions	Date

CONSULTANTS:

REGISTERED PROFESSIONAL ENGINEER DOYLE W. MAGNUS 21231 OKLAHOMA 4/1/13

ARCHITECT/ENGINEERS: CERT. OF AUTHORITY 3722 EXP. 06/30/2013

BENHAM / ELLERBE BECKET

Drawing Title: ELECTRICAL EIGHTH FLOOR - POWER PLAN	Project Title: OKC VA MEDICAL CENTER 8TH FLOOR SICU ADDITION	Project Number: 635-406	Office of Construction and Facilities Management
Approved: Project Director	Location: OKLAHOMA CITY, OK	Building Number: 001	
	Date: 04/01/2013 · Checked: JS · Drawn: NS	Drawing Number: EP181 Dwg. -- of --	Department of Veterans Affairs

VA FORM 08-6231

1 EL181 EIGHTH FLOOR - LIGHTING PLAN
SCALE: 1/8" = 1'-0"

GENERAL NOTES:

1. NEW DEVICES, EQUIPMENT, OR FIXTURES ARE INDICATED BY BOLD LINE WEIGHT. SCREENED TEXT AND EQUIPMENT DENOTES EXISTING TO REMAIN.
2. SEE SHEET E-605 FOR LIGHTING FIXTURE SCHEDULE.
3. LETTER BY SIDE OF LIGHT FIXTURE INDICATES TYPE, AND SMALL LETTER DENOTES SWITCH CONTROLLING FIXTURE. WIRE FIXTURES TO CIRCUIT NUMBER AND PANELBOARD INDICATED.
4. ALL CONDUCTORS TO BE #12 AWG, UNLESS OTHERWISE NOTED. USE #10 AWG FOR EMERGENCY CIRCUITS. RUN NO MORE THAN (3) CIRCUITS PER HOME RUN.

KEYED NOTES:

*1. LOW VOLTAGE CONTROL RELAY ABOVE CEILING TO INTERFACE WITH BED STATION FOR CONTROL OF AMBIENT AND READING LIGHTS.
*2. LIGHT SWITCHES TO CONTROL AMBIENT LIGHT IN FIXTURE TYPE "B" DOWN LIGHTS FIXTURE TYPE "C" AND COVE LIGHTS TYPE G. REFER TO SHEET E-605, DETAIL 1.
*3. LIGHT SWITCH MOUNTED ON HEADWALL TO CONTROL EXAM LIGHT IN FIXTURE TYPE B.
*4. LIGHT SWITCHES AND DIMMERS CONTROLLING EAST AREA. REFER TO E-605, DETAIL 2.
*5. LIGHT SWITCHES AND DIMMERS CONTROLLING WEST AREA. REFER TO E-605, DETAIL 3.
*6. NUMBER INSIDE BOX H8-X INDICATES CIRCUIT IN PANELBOARD FEEDING LIGHT FIXTURES IN THE ROOM OR AREA AS SHOWN.
*7. ALL HATCHED AND EXIT SIGN FIXTURES TO BE CONNECTED TO PANELBOARD H8LS CIRCUIT #1. CONNECT INNER LAMP BALLAST TO EMERGENCY POWER CIRCUIT AND OUTER LAMP BALLAST TO NORMAL POWER.
*8. TYPE "B" FIXTURE IN PATIENT ROOM TO BE CONNECTED TO CIRCUIT INDICATED IN PANELBOARD H8CR, ALL OTHER FIXTURES IN PATIENT ROOM TO BE CONNECTED TO CIRCUIT INDICATED IN PANELBOARD H8.
*9. FIXTURE ABOVE THE PATIENT BED PROVIDED WITH HEADWALL. REFER TO SHEET AS710 FOR MOUNTING AND DETAILS.
*10. NIGHT LIGHT. REFER TO AS710 FOR MOUNTING AND DETAILS.
*11. ONE SWITCH TO CONTROL TYPE "C" FIXTURES AND ONE SWITCH TO CONTROL FIXTURES TYPES "G" AND "G1".

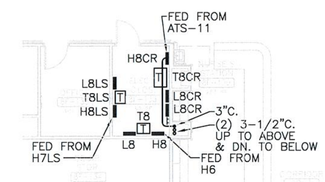

2 EL181 DETAIL - ELECTRIC ROOM 8F-133
SCALE: 1/8" = 1'-0"

8' 4' 0 8' 16' 24'
SCALE IN FEET (1/8"=1'-0")

FULLY SPRINKLERED

Revisions	Date

CONSULTANTS:

REGISTERED PROFESSIONAL ENGINEER DOYLE W. MAGNUS 21231 OKLAHOMA 9/1/13

ARCHITECT/ENGINEERS: CERT. OF AUTHORITY 3722 EXP. 06/30/2013

BENHAM / ELLERBE BECKET

Drawing Title	Project Title	Project Number
ELECTRICAL EIGHTH FLOOR - LIGHTING PLAN	OKC VA MEDICAL CENTER 8TH FLOOR SICU ADDITION	635-406
		Building Number: 001
Approved: Project Director	Location: OKLAHOMA CITY, OK	Drawing Number: EL181
	Date: 04/01/2013 · Checked: JS · Drawn: NS	Dwg. -- of --

Office of Construction and Facilities Management

Department of Veterans Affairs

VA FORM 08-6231

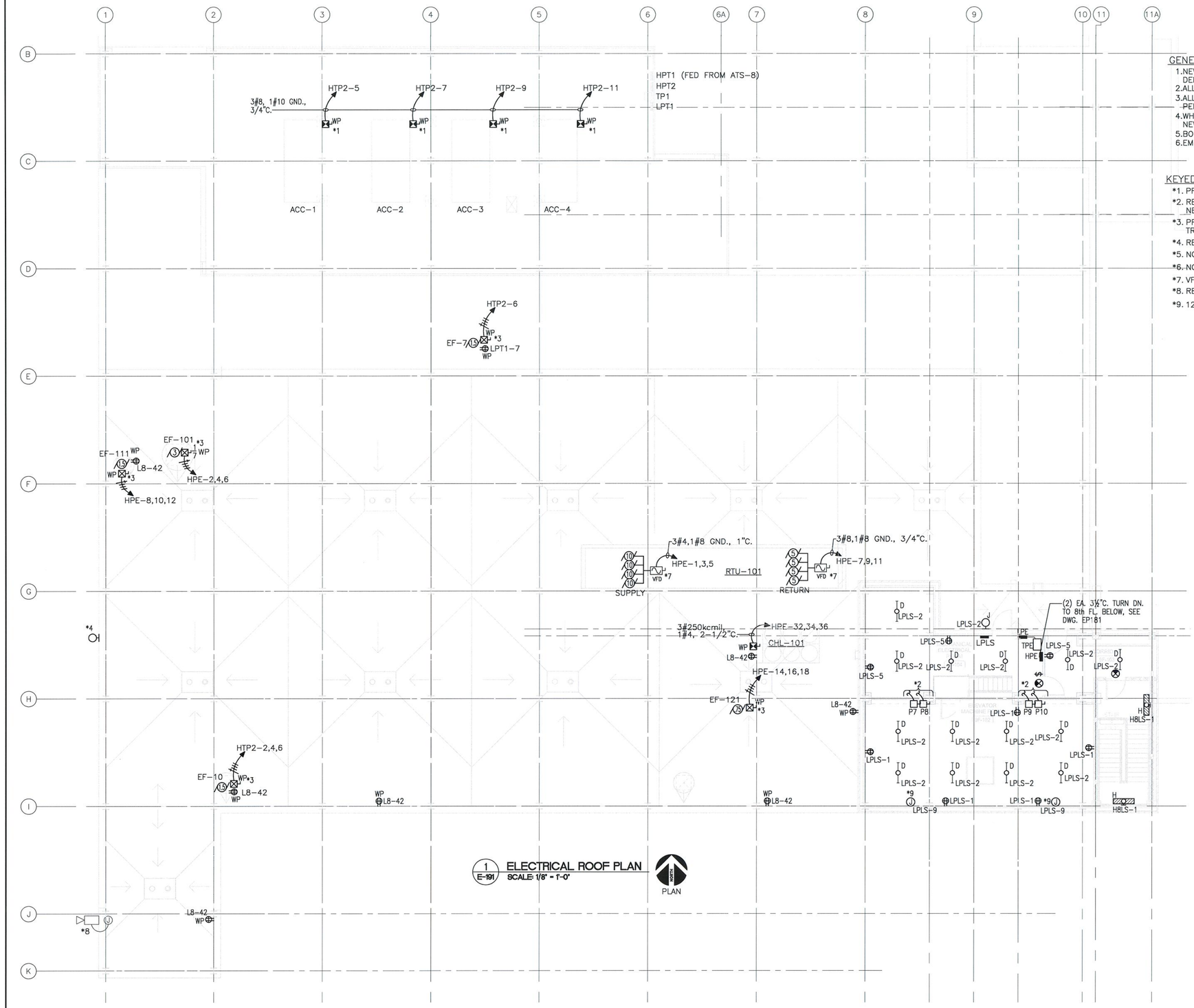

1 E-191 ELECTRICAL ROOF PLAN
SCALE: 1/8" = 1'-0"

NORTH PLAN

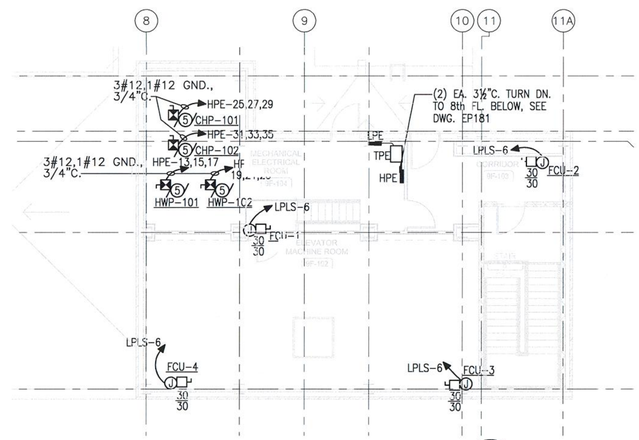

2 E-191 ELECTRICAL MECH. EQUIPMENT
SCALE: 1/8" = 1'-0"

NORTH PLAN

8' 4' 0 8' 16' 24'
SCALE IN FEET (1/8"=1'-0")

GENERAL NOTES:

1. NEW DEVICES, EQUIPMENT, OR FIXTURES ARE INDICATED BY BOLD LINE WEIGHT. SCREENED TEXT AND EQUIPMENT DENOTES EXISTING TO REMAIN. SCREENED NOTES DENOTES SCOPE OF WORK NOT INCLUDED IN THIS PHASE.
2. ALL CONDUIT SHALL BE CONCEALED IN WALLS OR ABOVE CEILING.
3. ALL CONDUCTORS TO RECEPTACLE CIRCUITS SHALL BE #12 AWG MINIMUM. RUN NO MORE THAN THREE CIRCUITS PER HOMERUN.
4. WHERE AN EXISTING CIRCUIT IS BEING RE-USED, EXTEND CIRCUIT TO NEW DEVICE FROM NEAREST JBOX USING NEW WIRE AND CONDUIT.
5. BOLD NUMBER BESIDE RECEPTACLES OR JBOX DENOTES THE PANEL BOARD AND CIRCUIT NUMBER.
6. EMBEDDED CONDUITS IN SLABS AND DECKS ARE PROHIBITED.

KEYED NOTES:

*1. PROVIDE NEW FEEDER TO RELOCATED EQUIPMENT FROM EXISTING DISCONNECT TO PANEL HTP2 AS SHOWN.
*2. RELOCATED ELEVATOR FUSED DISCONNECT SWITCHES. EXTEND EXISTING CONDUIT FROM LEVEL BELOW AND PROVIDE NEW FEEDER FROM PANEL HBE IN ROOM BG-101 IN THE BASEMENT. PROVIDE 3#1, 1#6 GND., 1-1/2"C.
*3. PROVIDE NEW NEMA SIZE 1 COMBINATION MOTOR STARTER WITH H.O.A. SWITCH AND A 480/120V CONTROL TRANSFORMER IN A WEATHERPROOF ENCLOSURE. REWIRE TO EXISTING PANEL HPT2.
*4. RELOCATED LIGHT FIXTURE. REFER TO SHT. ED181. SEE KEYED NOTE *6.
*5. NOT USED.
*6. NOT USED.
*7. VFD PROVIDED BY RTU MANUFACTURER.
*8. RELOCATED AND REWIRED CAMERA. SEE SHT. ED181.
*9. 120V. TO SMOKE DAMPERS ON SOUTH WALL ELEVATOR MACH. ROOM 9F-102.

FULLY SPRINKLERED

Revisions	Date

CONSULTANTS:

REGISTERED PROFESSIONAL ENGINEER — DOYLE W. MAGNUS — 21231 — OKLAHOMA

ARCHITECT/ENGINEERS: CERT. OF AUTHORITY 3722 EXP. 06/30/2013

BENHAM / ELLERBE BECKET

Drawing Title	ELECTRICAL ELECTRICAL ROOF PLAN
Approved Project Director	
Project Title	OKC VA MEDICAL CENTER 8TH FLOOR SICU ADDITION
Location	OKLAHOMA CITY, OK
Date	04/01/2013
Checked	JS
Drawn	SLS
Project Number	635-406
Building Number	001
Drawing Number	E-191 Dwg. -- of --

Office of Construction and Facilities Management

Department of Veterans Affairs

VA FORM 08-6231

File name: P:\OKC\VAE\605100430_OKCVAMedSICU\20_DESIGN\40_CAD\EL\0043E-191.dwg
Date: April 11, 2013 - 2:46pm
User: SLSUPERSON

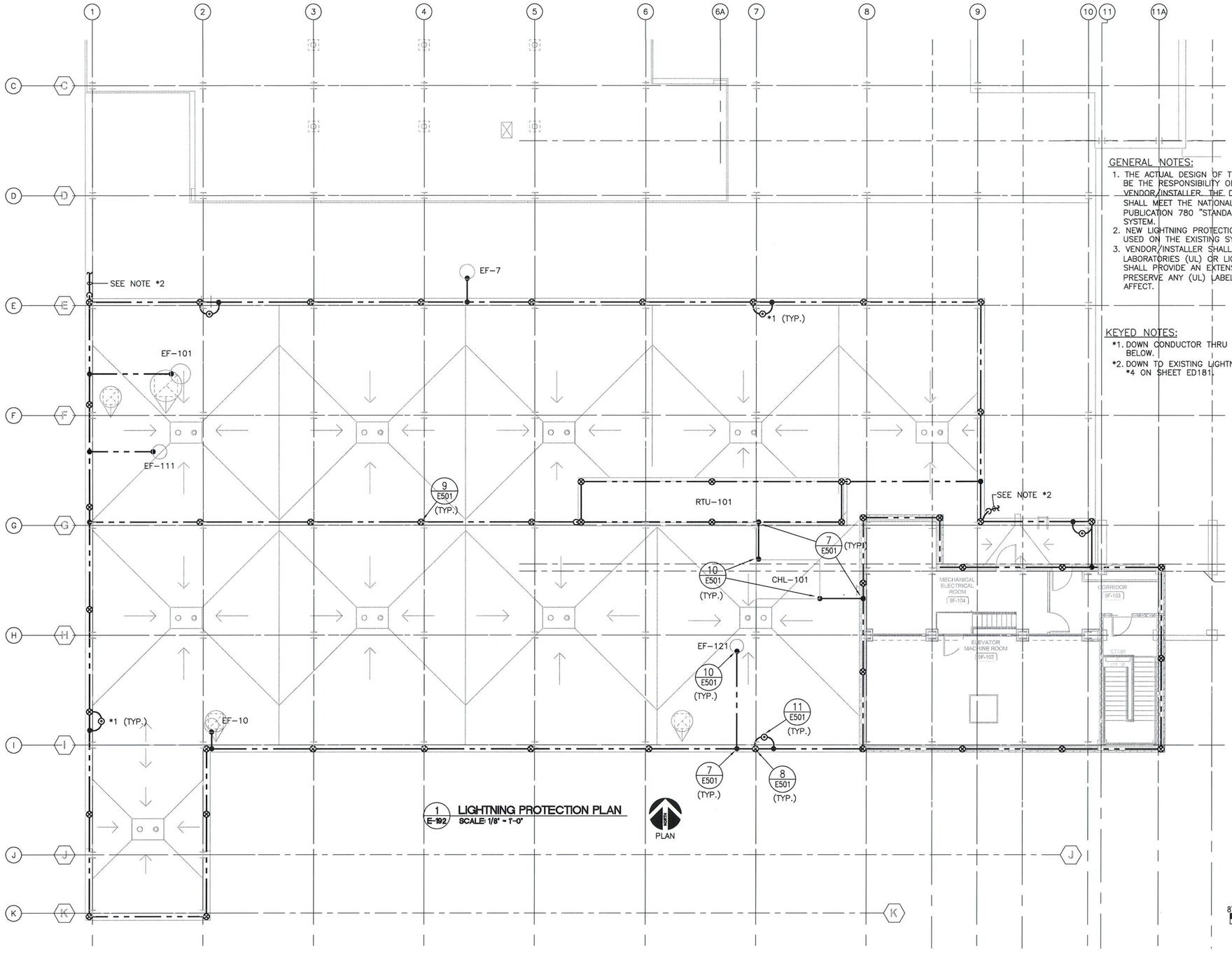

1 E-192 LIGHTNING PROTECTION PLAN
SCALE: 1/8" = 1'-0"

GENERAL NOTES:

1. THE ACTUAL DESIGN OF THE LIGHTNING PROTECTION SYSTEM SHALL BE THE RESPONSIBILITY OF THE LIGHTNING PROTECTION SYSTEM VENDOR/INSTALLER. THE DESIGN AND THE MATERIAL REQUIREMENTS SHALL MEET THE NATIONAL FIRE PROTECTION ASSOCIATION (NFPA) PUBLICATION 780 "STANDARD OF INSTALLATION" FOR A CLASS 2 SYSTEM.
2. NEW LIGHTNING PROTECTION MATERIALS SHALL MATCH THE MATERIALS USED ON THE EXISTING SYSTEM.
3. VENDOR/INSTALLER SHALL BE CERTIFIED BY EITHER UNDERWRITERS LABORATORIES (UL) OR LIGHTNING PROTECTION INSTITUTE (LPI) AND SHALL PROVIDE AN EXTENSION OF THE EXISTING SYSTEM THAT WILL PRESERVE ANY (UL) LABEL OR (LPI) CERTIFICATE PRESENTLY IN AFFECT.

KEYED NOTES:

*1. DOWN CONDUCTOR THRU THE ROOF. CONNECT TO STEEL COLUMN BELOW.
*2. DOWN TO EXISTING LIGHTNING PROTECTION SYSTEM. SEE KEYED NOTE *4 ON SHEET ED181.

8' 4' 0 8' 16' 24'
SCALE IN FEET (1/8"=1'-0")

FULLY SPRINKLERED

Revisions	Date

CONSULTANTS:

REGISTERED PROFESSIONAL ENGINEER DOYLE W. MAGNUS 21221 STATE OF OKLAHOMA 04/01/13

ARCHITECT/ENGINEERS: CERT. OF AUTHORITY 3722 EXP. 06/30/2013

BENHAM / ELLERBE BECKET

Drawing Title: ELECTRICAL LIGHTNING PROTECTION PLAN

Approved: Project Director

Project Title: OKC VA MEDICAL CENTER 8TH FLOOR SICU ADDITION

Location: OKLAHOMA CITY, OK

Date: 04/01/2013 | Checked: JS | Drawn: SLS

Project Number: 635-406

Building Number: 001

Drawing Number: E-192

Dwg. -- of --

Office of Construction and Facilities Management

Department of Veterans Affairs

VA FORM 08-6231

File name: P:\OKC\ME\605100\4300_alexandradocs\20_DESIGN\40_CAD\E\0043E-192.dwg
Date: April 1, 2013 - 1:39pm
User: SAMPSONNJ

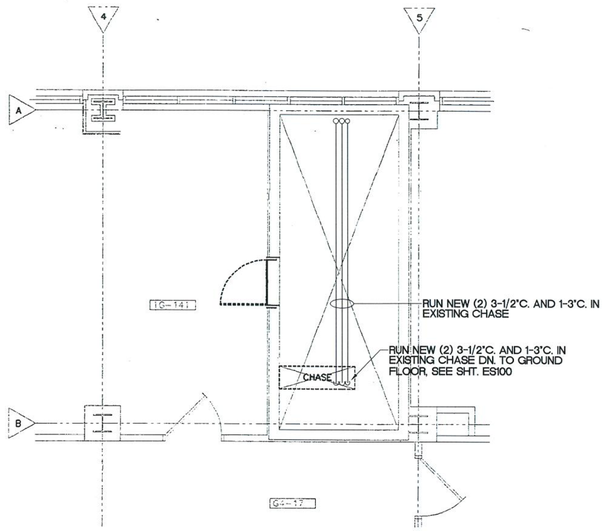

TYPICAL ELECTRICAL CHASE 1ST, 2ND, 3RD AND 4TH FLOORS
SCALE: 1/4" = 1'-0"

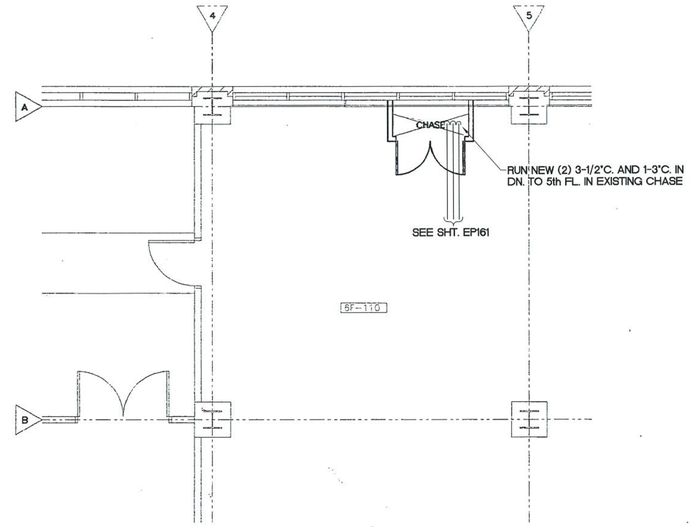

6TH FLOOR DETAIL PLAN – ELEC. CHASE
SCALE: 1/4" = 1'-0"

EXISTING DRAWING 1-E16, FOR REFERENCE ONLY

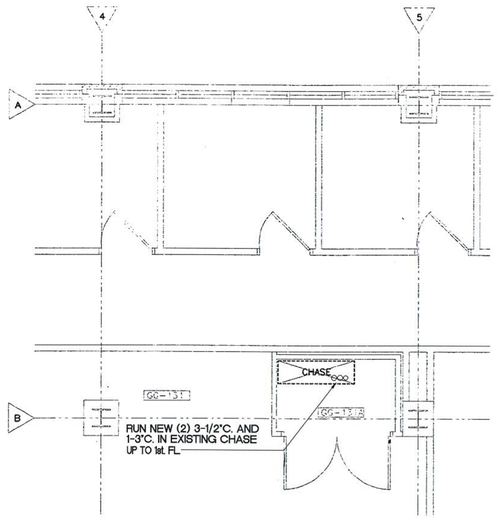

GROUND FLOOR DETAIL PLAN – ELEC. CHASE
SCALE: 1/4" = 1'-0"

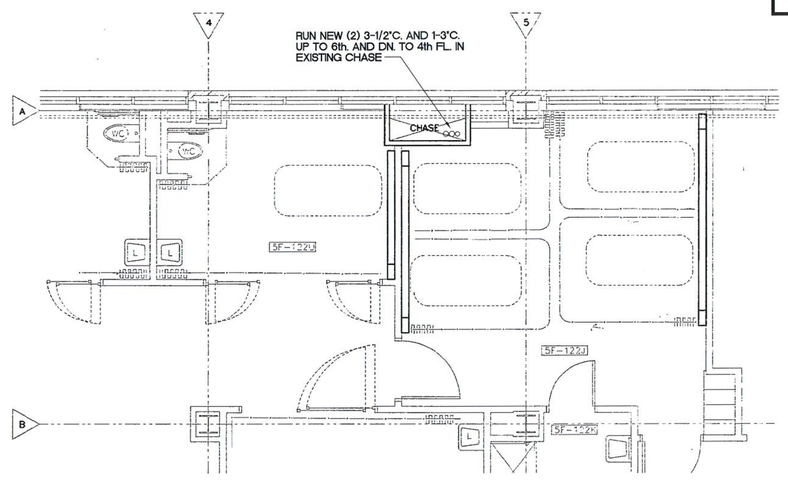

5TH FLOOR DETAIL PLAN – ELEC. CHASE
SCALE: 1/4" = 1'-0"

4' 2' 0 4' 8' 12'
SCALE IN FEET (1/4"=1'-0")

FULLY SPRINKLERED

Revisions	Date

CONSULTANTS:

REGISTERED PROFESSIONAL ENGINEER DOYLE W. MAGNUS 21231 OKLAHOMA 4/1/13

ARCHITECT/ENGINEERS: CERT. OF AUTHORITY 3722 EXP. 06/30/2013

BENHAM / ELLERBE BECKET

Drawing Title: ELECTRICAL ELECTRICAL CHASE PARTIAL PLANS	Project Title: OKC VA MEDICAL CENTER 8TH FLOOR SICU ADDITION	Project Number: 635-406	Office of Construction and Facilities Management
Approved: Project Director	Location: OKLAHOMA CITY, OK	Building Number: 001	
	Date: 04/01/2013 / Checked: JS / Drawn: SLS	Drawing Number: E-405 Dwg. of --	Department of Veterans Affairs

VA FORM 08-6231

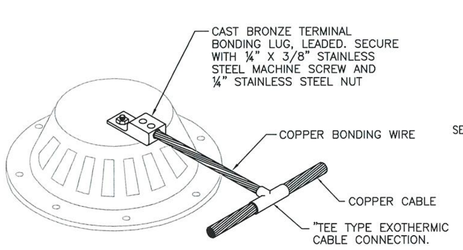

1 E501 TYP. ROOF DRAIN BOND
SCALE: NONE

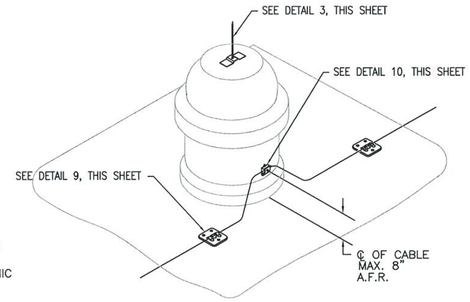

2 E501 TYP. AIR TERMINAL AND BOND PLACEMENT
SCALE: NONE

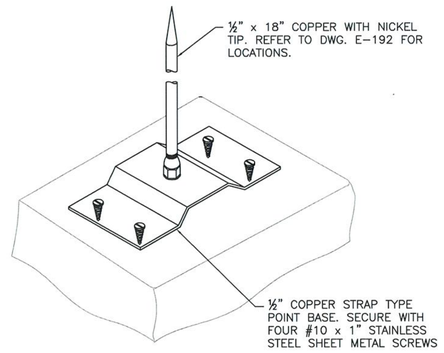

3 E501 EQUIPMENT AIR TERMINAL
SCALE: NONE

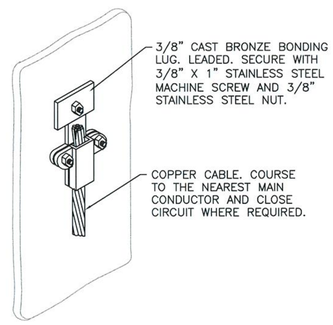

4 E501 TYP. ROOF HATCH BOND
SCALE: NONE

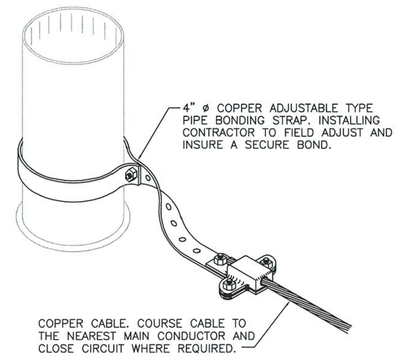

5 E501 TYP. VENT THRU-ROOF BOND
SCALE: NONE

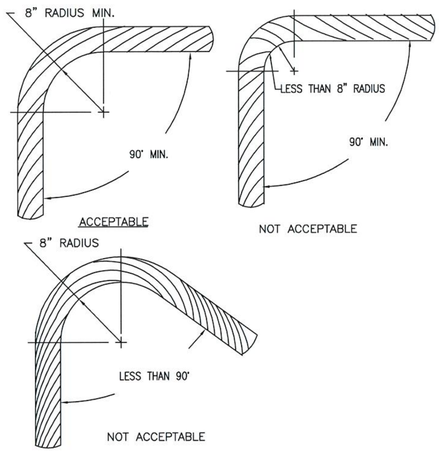

6 E501 TYP. CABLE BEND REQUIREMENTS
SCALE: NONE

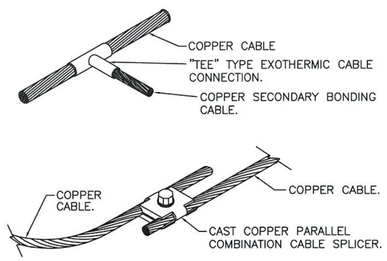

7 E501 TYP. CABLE SPLICERS
SCALE: NONE

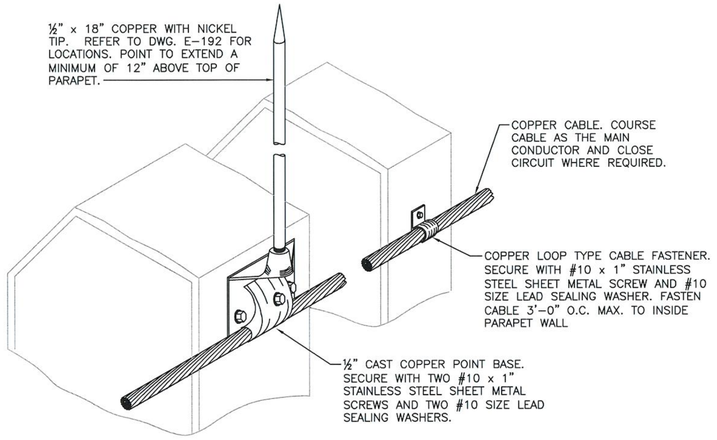

8 E501 PARAPET AIR TERMINAL
SCALE: NONE

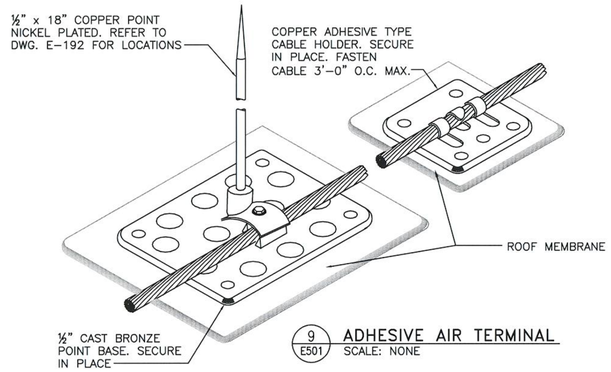

9 E501 ADHESIVE AIR TERMINAL
SCALE: NONE

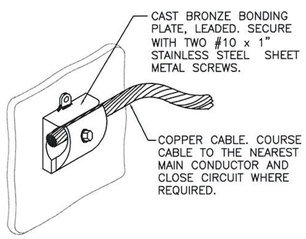

10 E501 TYP. EQUIPMENT BOND
SCALE: NONE

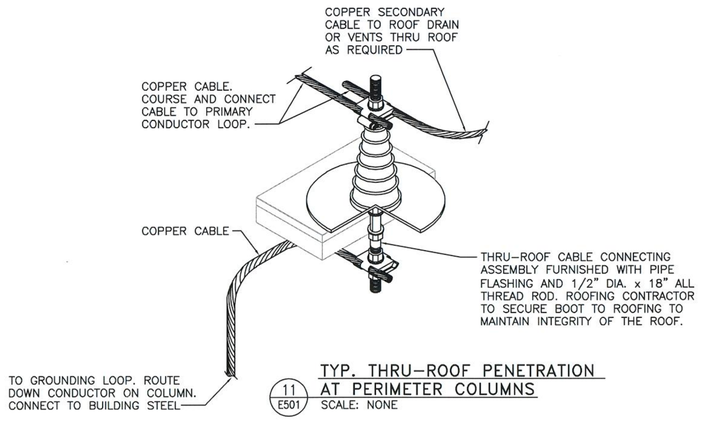

11 E501 TYP. THRU-ROOF PENETRATION AT PERIMETER COLUMNS
SCALE: NONE

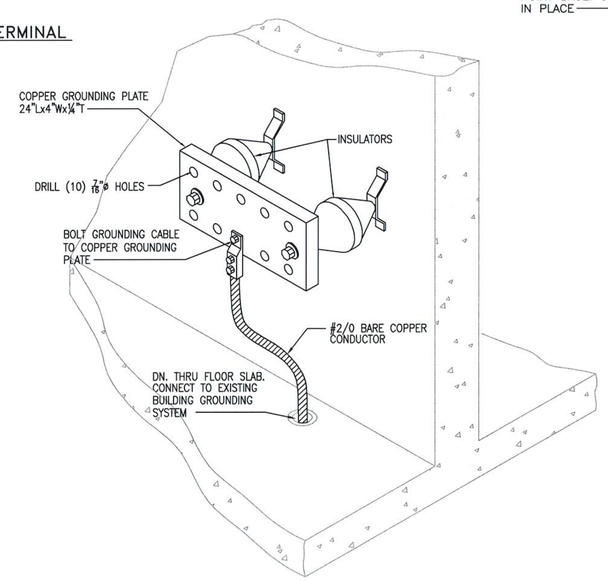

12 E501 COPPER GROUNDING PLATE DETAIL
SCALE: NONE

FULLY SPRINKLERED

Revisions:	Date

CONSULTANTS:

ARCHITECT/ENGINEERS: CERT. OF AUTHORITY 3722 EXP. 06/30/2013

BENHAM / ELLERBE BECKET

REGISTERED PROFESSIONAL ENGINEER DOYLE W. MAGNUS 21031 OKLAHOMA 4/11/13

Drawing Title	ELECTRICAL LIGHTNING PROTECTION AND GROUNDING DETAILS
Approved: Project Director	
Project Title	OKC VA MEDICAL CENTER 8TH FLOOR SICU ADDITION
Location	OKLAHOMA CITY, OK
Date	04/01/2013
Checked	JS
Drawn	SLS
Project Number	635-406
Building Number	001
Drawing Number	E-501
Dwg. — of —	

Office of Construction and Facilities Management

Department of Veterans Affairs

VA FORM 08-6231

File name: P:\OKC\AE\635\04300_okcmedsicu\00_DESIGN\VA_CAD\E\E-501.dwg
Date: April 1, 2013 - 1:38pm
User: SAMPSONNJ

GENERAL NOTES:

1. NEW WORK IS INDICATED BY BOLD LINE WEIGHT. EXISTING EQUIPMENT IS INDICATED BY SCREENED LINE WEIGHT.
2. REFER TO E-405, EP161 AND ES100 FOR PROPOSED CONDUIT ROUTING FOR FEEDERS (1) & (2)

CABLE/CONDUIT SCHEDULE (THIS SHEET ONLY)	
ITEM	DESCRIPTION
(1)	2 SETS EACH 4#350kcmil, 1#1/0 GND., 3½"C.
(1a)	2 SETS EACH 4#350kcmil, 1#1/0 GND., 4"C.
(2)	4#250kcmil, 1#4 GND., 3"C.
(2a)	4#250kcmil, 1#4 GND., 4"C.

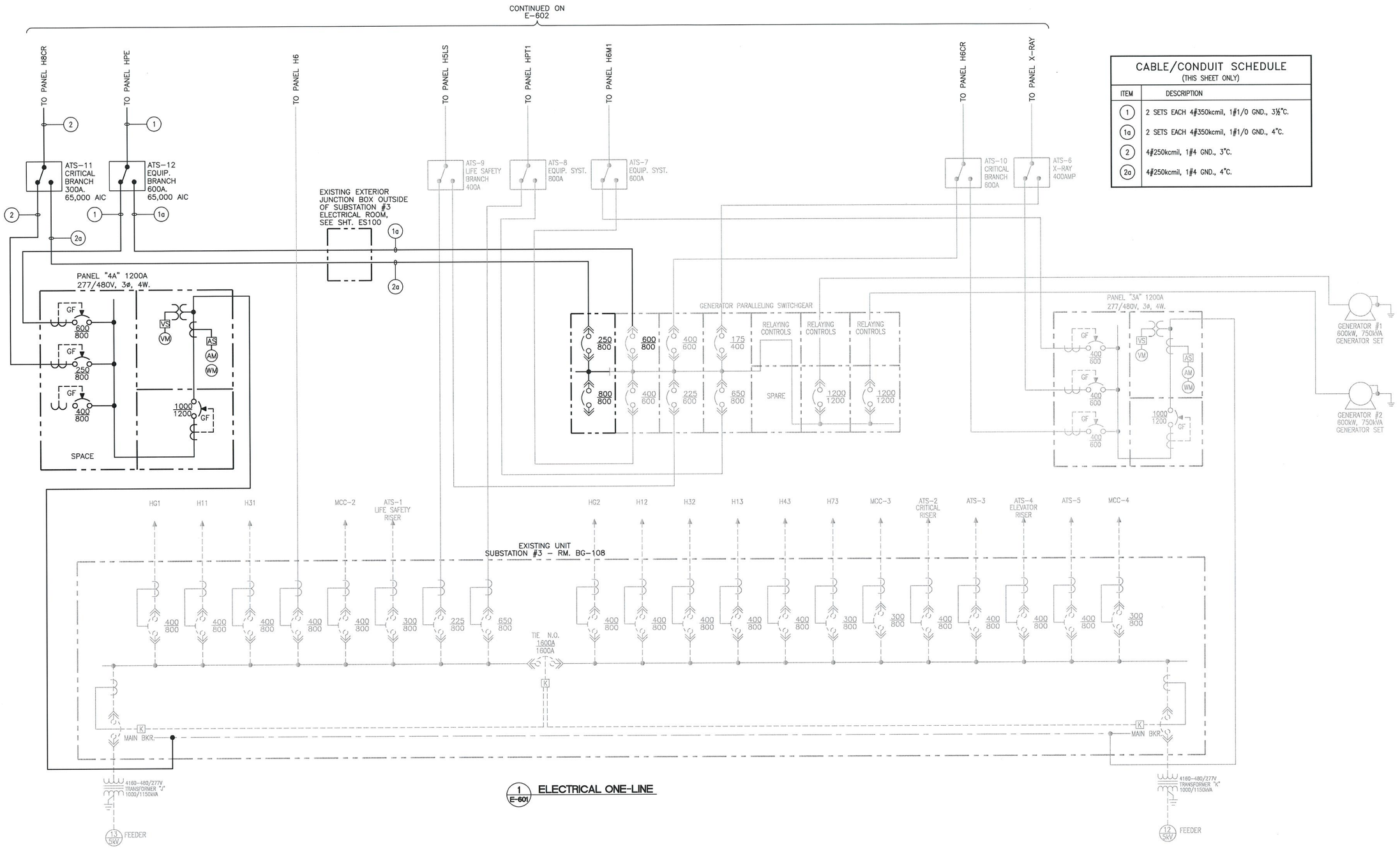

1 E-601 ELECTRICAL ONE-LINE

FULLY SPRINKLERED

Revisions	Date

CONSULTANTS:

ARCHITECT/ENGINEERS: CERT. OF AUTHORITY 3722 EXP. 06/30/2013

BENHAM / ELLERBE BECKET

REGISTERED PROFESSIONAL ENGINEER DOYLE VR MAGNUS 21231 OKLAHOMA 4/11/13

Drawing Title	ELECTRICAL ELECTRICAL ONE-LINE
Approved Project Director	
Project Title	OKC VA MEDICAL CENTER 8TH FLOOR SICU ADDITION
Location	OKLAHOMA CITY, OK
Date	04/01/2013
Checked	JS
Drawn	SS
Project Number	635-406
Building Number	001
Drawing Number	E-601
Dwg. — of —	

Office of Construction and Facilities Management

Department of Veterans Affairs

VA FORM 08-6231

File name: P:\OKC\VE\635103A300_akromestacs\20_DESIGN\40_CAD\E\004E-601.dwg
Plot Scale: 1.0000 ' = 1.0000'
Plot Date: 4/11/2013 1:38pm
User: SAMPSONNJ

GENERAL NOTES:

1. NEW WORK IS INDICATED BY BOLD LINE WEIGHT. EXISTING EQUIPMENT IS INDICATED BY SCREENED LINE WEIGHT.

KEYED NOTES:

*1. PROVIDE A 3-POLE, 100A. CIRCUIT BREAKER IN PANELBOARD.
*2. PROVIDE A 3-POLE, 125A CIRCUIT BREAKER IN PANELBOARD.

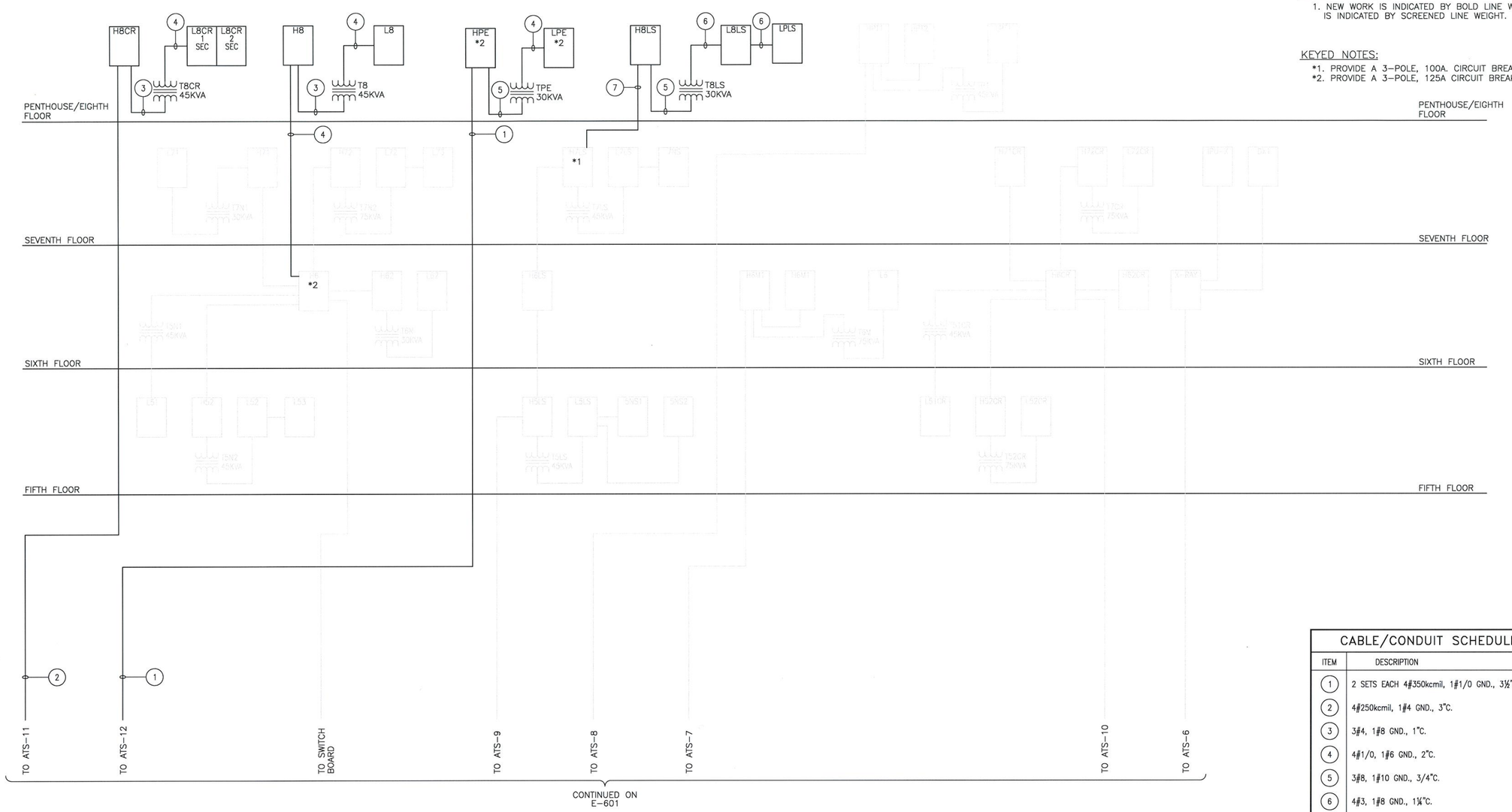

1 E-602 ELECTRICAL ONE-LINE

CABLE/CONDUIT SCHEDULE	
ITEM	DESCRIPTION
1	2 SETS EACH 4#350kcmil, 1#1/0 GND., 3½"C.
2	4#250kcmil, 1#4 GND., 3"C.
3	3#4, 1#8 GND., 1"C.
4	4#1/0, 1#6 GND., 2"C.
5	3#8, 1#10 GND., 3/4"C.
6	4#3, 1#8 GND., 1¼"C.
7	4#3, 1#8 GND., 1¼"C.
8	4#6, 1#10 GND., 3/4"C.

FULLY SPRINKLERED

Revisions	Date

CONSULTANTS:

REGISTERED PROFESSIONAL ENGINEER DOYLE W. MAGNUS 21231 OKLAHOMA 4/1/13

ARCHITECT/ENGINEERS: CERT. OF AUTHORITY 3722 EXP. 06/30/2013

BENHAM / ELLERBE BECKET

Drawing Title	ELECTRICAL ELECTRICAL ONE-LINE
Approved: Project Director	
Project Title	OKC VA MEDICAL CENTER 8TH FLOOR SICU ADDITION
Location	OKLAHOMA CITY, OK
Date	04/01/2013
Checked	JS
Drawn	SS
Project Number	635-406
Building Number	001
Drawing Number	E-602 Dwg. -- of --

Office of Construction and Facilities Management

Department of Veterans Affairs

VA FORM 08-6231

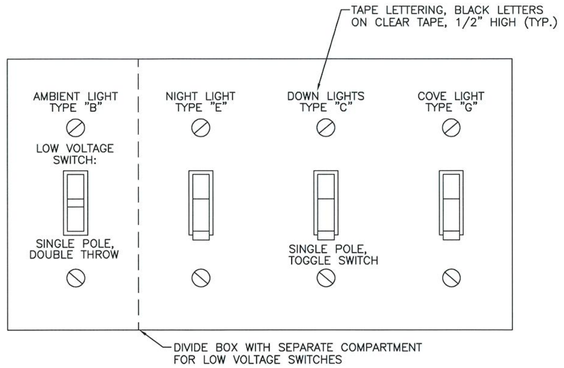

1 / E-605 TYP. SWITCH LAYOUT IN PATIENT ROOMS
SCALE: NONE

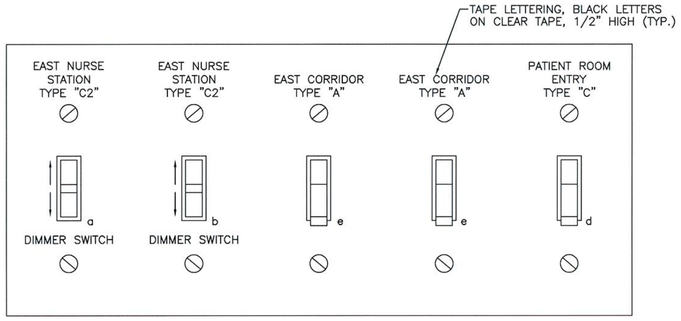

2 / E-605 TYP. SWITCH LAYOUT IN EAST NURSE STATION
SCALE: NONE

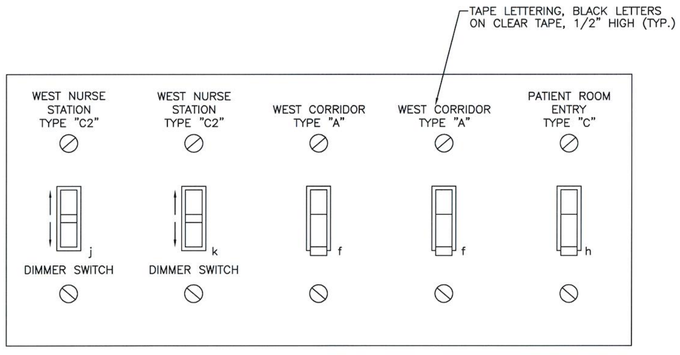

3 / E-605 TYP. SWITCH LAYOUT IN WEST NURSE STATION
SCALE: NONE

LIGHTING FIXTURE SCHEDULE

FIXTURE I.D.	TYPE	MANUFACTURER & CATALOG NUMBER	LAMPS *2 NO.	WATTS	TYPE	CCT. VOLTS	REMARKS
A	2'x4' INDIRECT RECESSED GRID FLUORESCENT	COLUMBIA STE24-332G-MPO-ESD-277	3	32	F32T8	277	PROVIDE TWO-LEVEL BALLAST
A1	2'x4' INDIRECT RECESSED GRID FLUORESCENT	COLUMBIA STE24-332SM-MPO-ESD-277	3	32	F32T8	277	PROVIDE TWO BALLASTS. ONE FOR INNER LAMP CONNECTED TO TO EMERGENCY AND ONE TWO-LEVEL BALLAST FOR OUTER LAMPS.
B	2'x4' MULTI-FUNCTION FLUORESCENT	ALKCO ME540N-277-PBL- LVC	8	28	T5	277	PROVIDE LOW VOLTAGE CONTROLLER PROVIDE 5,000°K LAMP IN EXAM SECTION.
C	6' DOWNLIGHT FLUORESCENT	JUNO CSH-226Q-650C-WH-LB27	2	26	CF	277	
C1	LED WET LOCATION 6" DOWNLIGHT	JUNO ICC22LED-3K 24W-WH	1	-	LED	277	WET LOCATION RATED
C2	RECESSED COMPACT FLUORESCENT	JUNO CH6-226Q-650C-WH-DB277	2	26	CF	277	SAME AS C BUT WITH DIMMING BALLAST. *3
D	4' PENDANT MOUNT INDUSTRIAL	LITHONIA LA-232-MVOLT-GEB10IS	2	32	T8	120/277	MOUNT AT 10' A.F.F UNLESS NOTED OTHERWISE
D1	ENCLOSED FLUORESCENT FIXTURE	COLUMBIA UIN2-217G-EB8-120-WL	2	17	T8	120	
E	NIGHT LIGHT FLUORESCENT	ALKCO 103/T5-4W/277	1	4	T5	277	*1
F	UNDER CABINET 4FT FLUORESCENT	LITHONIA N2532-277-GEB10IS-SWR	1	32	F32T8	277	MOUNT UNDER CABINET AND HARDWIRE TO CIRCUIT INDICATED
F1	UNDER CABINET 3FT FLUORESCENT	LITHONIA N2525-277-GEB10IS-SWR	1	25	F32T8	277	MOUNT UNDER CABINET AND HARDWIRE TO CIRCUIT INDICATED
G	COVE STAGGERED STRIP - 4FT FLUORESCENT	LITHONIA SS132-277-GEB	1	32	T8	277	
G1	COVE STAGGERED STRIP - 3FT FLUORESCENT	LITHONIA SS125-277-GEB	1	25	T8	277	
H	WALL MOUNT FLUORESCENT	TERON BYD46232E-SM (MATTE SILVER)	2	32	F32T8	120/277	MOUNT 8'-6" AFF
J	WALL MOUNT COMPACT FLUORESCENT	LITHONIA TWA-42TT-MVOLT-PE-LPI	1	42	42TRT	120/277	MOUNT ABOVE DOOR PROVIDE PHOTOCELL
K	RECESSED COVE	ALERA AL-2T8-R-NA-E-U-S-4FEET	2	32	F32T8	277	
L	2'x4' LENSED RECESSED FLUORESCENT	COLUMBIA WT24232FFAA12-E-U	2	32	F32T8	120/277	
M	2'x4' LENSED RECESSED FLUORESCENT	COLUMBIA 4PS24332GFSA12-E-U	3	32	F32T8	120/277	
	EXIT SIGN	DUAL-LITE LECSR-WE(SINGLE) OR LECDR-WE(DOUBLE)			LED	120/277	FACES AND ARROWS AS INDICATED IN DRAWINGS

NOTES:
*1. COORDINATE FIXTURE MOUNTING HEIGHT WITH ARCHITECTURE ELEVATION.
*2. ALL LAMPS TO BE 4100K.
*3. PROVIDE ADVANCE MARK X BALLAST OR EQUAL FOR FLUORESCENT DIMMING.

FULLY SPRINKLERED

Revisions	Date

CONSULTANTS:

REGISTERED PROFESSIONAL ENGINEER DOYLE W. MAGNUS 21231 OKLAHOMA

ARCHITECT/ENGINEERS: CERT. OF AUTHORITY 3722 EXP. 06/30/2013

BENHAM / ELLERBE BECKET

Drawing Title: ELECTRICAL LIGHTING SCHEDULES AND DETAILS

Approved Project Director

Project Title: OKC VA MEDICAL CENTER 8TH FLOOR SICU ADDITION

Location: OKLAHOMA CITY, OK

Date: 04/01/2013 | Checked: JS | Drawn: SS

Project Number: 635-406

Building Number: 001

Drawing Number: E-605 Dwg. -- of --

Office of Construction and Facilities Management

Department of Veterans Affairs

VA FORM 08-6231

File name: P:\OKC\AE\635\100A300_alexmedelsica\20_DESIGN\40_CAD\E\00435E-605.dwg
Date: April 1, 2013 - 1:39pm
User: SMIPSONNJ

PANEL H8 | 480Y/277 VOLTS | 3 PHASE | 4 WIRE | 225 AMP BUS | 150 AMP, MCB
18,000 RMS SYM. A.I.C. | ENCLOSURE TYPE: NEMA 1 | MOUNTING: SURFACE | SECTION: 1
LOCATION: ELECTRICAL ROOM 8F-133
E - EQUIPMENT, L - LIGHTS, M - MECHANICAL, MCB - MAIN CIRCUIT BREAKER, MCS - MOLDED CASE SWITCH,
MLO - MAIN LUGS ONLY, R - RECEPTACLE, SC - SPARE CIRCUIT, SO - SPACE ONLY

NO.	CIRCUIT USE	CCT BKR	CONNECTED LOAD VA A	B	C	CCT BKR	CIRCUIT USE	NO.
1	L - ROOMS 102-109,111	1P 20	3980			1P 20	S.C	2
3	L - ROOMS 112-114, 117-122	1P 20		3590		1P 20	S.C	4
5	S.C.	1P 20				1P 20	S.C	6
7	L - ROOMS 115,116,C8-6, C8-7	1P 20	3320			1P 20	S.C	8
9	L - ROOMS 133-136, 139-146	1P 20		2180		1P 20	S.C	10
11	L - ROOMS C8-1,C8-2,C8-3, C8-6,C8-10, 124,125	1P 20			3020	1P 20	S.C	12
13	L - ROOMS 100,101,C8-5, 127-129	1P 20	2240			1P 20	S.C	14
15	S.C.	1P 20				1P 20	S.C	16
17	S.C	1P 20				1P 20	S.C	18
19	S.C.	1P 20				1P 20	S.C	20
21	S.C	1P 20				1P 20	S.C	22
23	S.C.	1P 20				1P 20	S.C	24
25	S.C	1P 20				1P 20	S.C	26
27	S.O.						S.O.	28
29	S.O.						S.O.	30
31	S.O.						S.O.	32
33	S.O.						S.O.	34
35	S.O.						S.O.	36
37	S.C.	3P 20	10980			3P 70	E - PANEL L8	38
39				11540				40
41					10720			42
			20520	17310	13740		EST. DEMAND KVA: 51.6	
NOTES:			51570				EST. DEMAND AMPS: 62.1	

PANEL L8 | 208Y/120 VOLTS | 3 PHASE | 4 WIRE | 225 AMP BUS | 150 AMP, MCB
10,000 RMS SYM. A.I.C. | ENCLOSURE TYPE: NEMA 1 | MOUNTING: SURFACE | SECTION: 1
LOCATION: ELECTRICAL ROOM 8F-133
E - EQUIPMENT, L - LIGHTS, M - MECHANICAL, MCB - MAIN CIRCUIT BREAKER, MCS - MOLDED CASE SWITCH,
MLO - MAIN LUGS ONLY, R - RECEPTACLE, SC - SPARE CIRCUIT, SO - SPACE ONLY

NO.	CIRCUIT USE	CCT BKR	CONNECTED LOAD VA A	B	C	CCT BKR	CIRCUIT USE	NO.
1	R - ROOM 111,112	1P 20	720	1080		1P 20	R - ROOM 104,105	2
3	R - ROOM 111,112	1P 20		1260	720	1P 20	R - ROOM 104,105	4
5	R - ROOM 108,109	1P 20			720	1P 20	R - ROOM 102,103	6
7	R - ROOM 108,109	1P 20	1080	720		1P 20	R - ROOM 102,103	8
9	R - ROOM 106,107	1P 20		720	720	1P 20	R - ROOM 121,122	10
11	R - ROOM 106,107	1P 20			1080	1P 20	R - ROOM 121,122,123	12
13	R - ROOM 113,114	1P 20	720	900		1P 20	R - ROOM 142, C8-9	14
15	R - ROOM 113,114	1P 20		1260	900	1P 20	R - ROOM 145	16
17	R - ROOM 117,118	1P 20			1080	1P 20	R - ROOM 139,140	18
19	R - ROOM 117,118	1P 20	720	900		1P 20	R - ROOM 100,101,C8-5	20
21	R - ROOM 119,120	1P 20		1080	1620	1P 20	R - ROOM 133-136	22
23	R - ROOM 119,120	1P 20			720	1P 20	R - ROOM 130	24
25	R - ROOM 148	1P 20	720	1260		1P 20	R - ROOM 127-129	26
27	R - ROOM 146	1P 20		540	1000	1P 20	R - ROOM 129	28
29	R - ROOM 146	1P 20			1000	1P 20	R - ROOM 129	30
31	R - ROOM 146	1P 20	900	360		1P 20	R - ROOM C8-1	32
33	R - ROOM 147	1P 20		720		1P 20	S.C.	34
35	R - ROOM 115	1P 20			1080	1P 20	S.C.	36
37	R - ROOM 116	1P 20	900			1P 20	S.C.	38
39	R - ROOM 116	1P 20		1000		1P 20	S.C.	40
41	R - ROOM 116	1P 20			540	1P 20	R -ROOF RECEPTACLES	42
				10980	11540	10720	EST. DEMAND KVA: 33.2	
NOTES:				33240			EST. DEMAND AMPS: 92.4	

PANEL H8LS | 480Y/277 VOLTS | 3 PHASE | 4 WIRE | 100 AMP BUS | 100 AMP, MCB
18,000 RMS SYM. A.I.C. | ENCLOSURE TYPE: NEMA 1 | MOUNTING: SURFACE | SECTION: 1
LOCATION: ELECTRICAL ROOM
E - EQUIPMENT, L - LIGHTS, M - MECHANICAL, MCB - MAIN CIRCUIT BREAKER, MCS - MOLDED CASE SWITCH,
MLO - MAIN LUGS ONLY, R - RECEPTACLE, SC - SPARE CIRCUIT, SO - SPACE ONLY

NO.	CIRCUIT USE	CCT BKR	CONNECTED LOAD VA A	B	C	CCT BKR	CIRCUIT USE	NO.
1	L - CORRIDOR LIGHTS	1P 20	1330			1P 20	S.C.	2
3	S.C.	1P 20				1P 20	S.C.	4
5	S.C.	1P 20				1P 20	S.C.	6
7	S.C.	1P 20				1P 20	S.C.	8
9	S.C.	1P 20				1P 20	S.C.	10
11	S.C.	1P 20				1P 20	S.C.	12
13	S.C.	1P 20				1P 20	S.C.	14
15	S.C.	1P 20				1P 20	S.C.	16
17	S.C.	1P 20				1P 20	S.C.	18
19	S.C.	1P 20				1P 20	S.C.	20
21	S.C.	1P 20				1P 20	S.C.	22
23	S.C.	1P 20				1P 20	S.C.	24
25	S.C.	1P 20				1P 20	S.C.	26
27	S.C.	1P 20				1P 20	S.C.	28
29	S.C.	1P 20				1P 20	S.C.	30
31	S.C.	1P 20				1P 20	S.C.	32
33	S.C.	1P 20				1P 20	S.C.	34
35	S.C.	1P 20				1P 20	S.C.	36
37	S.C.	3P 20	2700			3P 45	E - PANEL L8LS	38
39				780				40
41					800			42
			4030	780	800		EST. DEMAND KVA: 5.6	
NOTES:			5610				EST. DEMAND AMPS: 6.8	

PANEL L8LS | 208Y/120 VOLTS | 3 PHASE | 4 WIRE | 100 AMP BUS | 100 AMP, MCB
10,000 RMS SYM. A.I.C. | ENCLOSURE TYPE: NEMA 1 | MOUNTING: SURFACE | SECTION: 1
LOCATION: ELECTRICAL ROOM
E - EQUIPMENT, L - LIGHTS, M - MECHANICAL, MCB - MAIN CIRCUIT BREAKER, MCS - MOLDED CASE SWITCH,
MLO - MAIN LUGS ONLY, R - RECEPTACLE, SC - SPARE CIRCUIT, SO - SPACE ONLY

NO.	CIRCUIT USE	CCT BKR	CONNECTED LOAD VA A	B	C	CCT BKR	CIRCUIT USE	NO.
1	E - FIRE ALARM PANEL	1P 20	300	100		1P 20	E - DOOR OPERATORS	2
3	E - FIRE ALARM PANEL	1P 20		300		1P 20	S.C.	4
5	S.C.	1P 20				1P 20	S.C.	6
7	S.C.	1P 20				1P 20	S.C.	8
9	S.C.	1P 20				1P 20	S.C.	10
11	S.C.	1P 20				1P 20	S.C.	12
13	S.C.	1P 20				1P 20	S.C.	14
15	S.C.	1P 20				1P 20	S.C.	16
17	S.C.	1P 20				1P 20	S.C.	18
19	S.C.	1P 20				1P 20	S.C.	20
21	S.C.	1P 20				1P 20	S.C.	22
23	S.C.	1P 20				1P 20	S.C.	24
25	S.C.	1P 20				1P 20	S.C.	26
27	S.C.	1P 20				1P 20	S.C.	28
29	S.C.	1P 20				1P 20	S.C.	30
31	S.C.	1P 20				1P 20	S.C.	32
33	S.C.	1P 20				1P 20	S.C.	34
35	S.C.	1P 20				1P 20	S.C.	36
37	E - PANEL LPLS	3P 60	2300			1P 20	S.C.	38
39				480		1P 20	S.C.	40
41					800	1P 20	S.C.	42
			2700	780	800		EST. DEMAND KVA: 4.3	
NOTES:			4280				EST. DEMAND AMPS: 11.9	

PANEL LPLS | 208Y/120 VOLTS | 3 PHASE | 4 WIRE | 100 AMP BUS | 60 AMP, MCB
10,000 RMS SYM. A.I.C. | ENCLOSURE TYPE: NEMA 1 | MOUNTING: SURFACE | SECTION: 1
LOCATION: ELEVATOR MECH ROOM
E - EQUIPMENT, L - LIGHTS, M - MECHANICAL, MCB - MAIN CIRCUIT BREAKER, MCS - MOLDED CASE SWITCH,
MLO - MAIN LUGS ONLY, R - RECEPTACLE, SC - SPARE CIRCUIT, SO - SPACE ONLY

NO.	CIRCUIT USE	CCT BKR	CONNECTED LOAD VA A	B	C	CCT BKR	CIRCUIT USE	NO.
1	R - ROOM 9P-102	1P 20	700	700		1P 20	L - ROOM 9F-102	2
3	S.C.	1P 20		280		1P 20	L - ROOM 9F-102, 9F-103	4
5	R - ROOM 9P-102	1P 20			700	1P 20	M - FCU's 1,2,3,4	6
7	R - ROOF	1P 20	900			1P 20	S.C.	8
9	S.C.	1P 20				1P 20	S.C.	10
11	S.C.	1P 20				1P 20	S.C.	12
13	S.C.	1P 20				1P 20	S.C.	14
15	S.C.	1P 20				1P 20	S.C.	16
17	S.C.	1P 20				1P 20	S.C.	18
19	S.C.	1P 20				1P 20	S.C.	20
21	S.C.	1P 20				1P 20	S.C.	22
23	S.C.	1P 20				1P 20	S.C.	24
25	S.C.	1P 20				1P 20	S.C.	26
27	S.C.	1P 20				1P 20	S.C.	28
29	S.C.	1P 20				1P 20	S.C.	30
31	S.C.	1P 20				1P 20	S.C.	32
33	S.C.	1P 20				1P 20	S.C.	34
35	S.C.	1P 20				1P 20	S.C.	36
37	S.O.						S.O.	38
39	S.O.						S.O.	40
41	S.O.						S.O.	42
			2300	280	800		EST. DEMAND KVA: 3.4	
NOTES:			3380				EST. DEMAND AMPS: 9.4	

PANELBOARDS ON THIS SHEETS:

H8 L8 H8LS L8LS

LPLS

FULLY SPRINKLERED

Revisions	Date

CONSULTANTS:

REGISTERED PROFESSIONAL ENGINEER DOYLE W. MARNUS 21237 OKLAHOMA

ARCHITECT/ENGINEERS: CERT. OF AUTHORITY 3722 EXP. 06/30/2013

BENHAM / ELLERBE BECKET

Drawing Title: ELECTRICAL PANELBOARD SCHEDULES

Approved: Project Director

Project Title: OKC VA MEDICAL CENTER 8TH FLOOR SICU ADDITION

Location: OKLAHOMA CITY, OK

Date: 04/01/2013 | Checked: JS | Drawn: SS

Project Number: 635-406

Building Number: 001

Drawing Number: E-610

Dwg. -- of --

Office of Construction and Facilities Management

Department of Veterans Affairs

VA FORM 08-6231

File name: P:\OKC\VE\605\1904300_okcmedsicu\20_DESIGN\40_CAD\E\09A3E-610.dwg
Date: April 1, 2013 - 1:40pm
User: SMIRSONNU

PANEL H8CR | 480Y/277 VOLTS, 3 PHASE, 4 WIRE, 225 AMP BUS, 225 AMP, MCB
18,000 RMS SYM. A.I.C. ENCLOSURE TYPE: NEMA 1 MOUNTING: SURFACE SECTION: 1
LOCATION: ELECTRICAL ROOM 8F-133
E - EQUIPMENT, L - LIGHTS, M - MECHANICAL, MCB - MAIN CIRCUIT BREAKER, MCS - MOLDED CASE SWITCH, MLO - MAIN LUGS ONLY, R - RECEPTACLE, S.C. - SPARE CIRCUIT, S.O. - SPACE ONLY

NO.	CIRCUIT USE	CCT BKR	CONNECTED LOAD VA A	B	C	CCT BKR	CIRCUIT USE	NO.
1	L - ROOMS 102-109	1P 20	1800			1P 20	S.C.	2
3	L - ROOMS 112-114,117-122	1P 20		1800		1P 20	S.C.	4
5	L - ROOMS 147,148,C8-1, C8-6	1P 20			930	1P 20	S.C.	6
7	L - ROOMS 130,C8-1,C8-6	1P 20	420			1P 20	S.C.	8
9	S.C.	1P 20				1P 20	S.C.	10
11	S.C.	1P 20				1P 20	S.C.	12
13	S.C.	1P 20				1P 20	S.C.	14
15	S.C.	1P 20				1P 20	S.C.	16
17	S.C.	1P 20				1P 20	S.C.	18
19	S.C.	1P 20				1P 20	S.C.	20
21	S.C.	1P 20				1P 20	S.C.	22
23	S.O.						S.O.	24
25	S.O.						S.O.	26
27	S.O.						S.O.	28
29	S.O.						S.O.	30
31	S.O.						S.O.	32
33	S.O.						S.O.	34
35	S.O.						S.O.	36
37	S.C.	3P 20	13420			3P 70	E - PANEL L8CR	38
39				13020				40
41					10760			42
			15640	14820	11690			

NOTES: 42150
EST. DEMAND KVA: 42.2
EST. DEMAND AMPS: 50.8

PANEL L8CR | 208Y/120 VOLTS, 3 PHASE, 4 WIRE, 225 AMP BUS, 150 AMP, MCB
10,000 RMS SYM. A.I.C. ENCLOSURE TYPE: NEMA 1 MOUNTING: SURFACE SECTION: 1
LOCATION: ELECTRICAL ROOM 8F-133
E - EQUIPMENT, L - LIGHTS, M - MECHANICAL, MCB - MAIN CIRCUIT BREAKER, MCS - MOLDED CASE SWITCH, MLO - MAIN LUGS ONLY, R - RECEPTACLE, SC - SPARE CIRCUIT, SO - SPACE ONLY

NO.	CIRCUIT USE	CCT BKR	CONNECTED LOAD VA A	B	C	CCT BKR	CIRCUIT USE	NO.
1	R - ROOM 8F-111	1P 20	900			1P 20	R - CORRIDOR C8-6	2
3	R - ROOM 8F-109	1P 20		900		1P 20	R - CORRIDOR C8-6	4
5	R - ROOM 8F-108	1P 20			900	1P 20	R - CORRIDOR C8-6	6
7	R - ROOM 8F-107	1P 20	900			1P 20	E - ROOM 8F-148	8
9	R - ROOM 8F-106	1P 20		900		1P 20	R - CHARTING STA. 8F-106/107, 8F-108/109	10
11	S.C.	1P 20				1P 20	R - CHARTING STA. 8F-111	12
13	R - ROOM 8F-112	1P 20	900			1P 20	R - ROOM 8F-143	14
15	R - ROOM 8F-113	1P 20		900		1P 20	R - ROOM 8F-143	16
17	R - ROOM 8F-114	1P 20			900	1P 20	R - ROOM 8F-143	18
19	R - ROOM 8F-117	1P 20	900			1P 20	E - ZVB-1,2	20
21	R - ROOM 8F-118	1P 20		900		1P 20	S.C.	22
23	R - ROOM 8F-119	1P 20			900	1P 20	S.C.	24
25	R - ROOM 8F-120	1P 20	900			1P 20	S.C.	26
27	R - CHARTING STA. 8F-117/118, 8F-119,120	1P 20		1000		1P 20	S.C.	28
29	S.C.	1P 20				1P 20	S.C.	30
31	R - ROOM 8F-148	1P 20	720			1P 20	S.C.	32
33	R - ROOM 8F-148	1P 20		720		1P 20	S.C.	34
35	R - ROOM 8F-148	1P 20			720	1P 20	S.C.	36
37	R - ROOM 8F-147	1P 20	1000			1P 20	S.C.	38
39	R - ROOM 8F-147	1P 20		1000		1P 20	S.C.	40
41	S.C.	1P 20				1P 20	S.C.	42
			9000	9320	6140			

NOTES: 24460
*1. PROVIDE THRU FEED LUGS.
EST. DEMAND KVA: 24.5
EST. DEMAND AMPS: 68.0
TOTAL FOR ALL SECTIONS:
DEMAND KVA: 37.2
DEMAND AMPS: 103.4

PANEL L8CR | 208Y/120 VOLTS, 3 PHASE, 4 WIRE, 225 AMP BUS, 225 AMP, MLO
10,000 RMS SYM. A.I.C. ENCLOSURE TYPE: NEMA 1 MOUNTING: SURFACE SECTION: 2
LOCATION: ELECTRICAL ROOM 8F-133
E - EQUIPMENT, L - LIGHTS, M - MECHANICAL, MCB - MAIN CIRCUIT BREAKER, MCS - MOLDED CASE SWITCH, MLO - MAIN LUGS ONLY, R - RECEPTACLE, SC - SPARE CIRCUIT, SO - SPACE ONLY

NO.	CIRCUIT USE	CCT BKR	CONNECTED LOAD VA A	B	C	CCT BKR	CIRCUIT USE	NO.
43	R - ROOM 8F-105	1P 20	900			1P 20	S.C.	44
45	R - ROOM 8F-104	1P 20		900		1P 20	S.C.	46
47	R - ROOM 8F-103	1P 20			900	1P 20	S.C.	48
49	R - ROOM 8F-102	1P 20	900			1P 20	S.C.	50
51	R - ROOM 8F-130	1P 20		720		1P 20	S.C.	52
53	R - ROOM 8F-130	1P 20			720	1P 20	S.C.	54
55	R - ROOM 8F-130	1P 20	720			1P 20	S.C.	56
57	E - ROOM 8F-130	1P 20		180		1P 20	S.C.	58
59	R - CHARTING STA. 8F-102/103 8F-104/105	1P 20			1000	1P 20	S.C.	60
61	R - ROOM 8F-121	1P 20	900			1P 20	S.C.	62
63	R - ROOM 8F-122	1P 20		900		1P 20	S.C.	64
65	R - CHARTING STA. 8F-121/122	1P 20			1000	1P 20	S.C.	66
67	R - ROOM 8F-126	1P 20	1000			1P 20	S.C.	68
69	R - ROOM 8F-126	1P 20		1000		1P 20	S.C.	70
71	R - ROOM 8F-126	1P 20			1000	1P 20	S.C.	72
73	S.C.	1P 20				1P 20	S.C.	74
75	S.C.	1P 20				1P 20	S.C.	76
77	S.C.	1P 20				1P 20	S.C.	78
79	S.C.	1P 20				1P 20	S.C.	80
81	S.C.	1P 20				1P 20	S.C.	82
83	S.C.	1P 20				1P 20	S.C.	84
			4420	3700	4620			

NOTES: 12740
EST. DEMAND KVA: 12.7
EST. DEMAND AMPS: 35.4

PANEL HPE (*1) | 480Y/277 VOLTS, 3 PHASE, 4 WIRE, 600 AMP BUS, 600 AMP, MCB
35,000 RMS SYM. A.I.C. ENCLOSURE TYPE: NEMA 1 MOUNTING: SURFACE SECTION: 1
LOCATION: ELEVATOR MACHINE ROOM 9F-104
E - EQUIPMENT, L - LIGHTS, M - MECHANICAL, MCB - MAIN CIRCUIT BREAKER, MCS - MOLDED CASE SWITCH, MLO - MAIN LUGS ONLY, R - RECEPTACLE, S.C. - SPARE CIRCUIT, SO - SPACE ONLY

NO.	CIRCUIT USE	CCT BKR	CONNECTED LOAD VA A	B	C	CCT BKR	CIRCUIT USE	NO.
1	M - RTU-101 SUPPLY FANS VFD (4-10HP MOTORS)	3P 80	15500 1250			3P 20	M - EF-101 3HP	2
3				15500 1250				4
5					15500 1250			6
7	M - RTU-101 RETURN FANS VFD (4-5HP MOTORS)	3P 40	8300 650			3P 20	M - EF-111 1.5HP	8
9				8300 650				10
11					8300 650			12
13	M - HWP-101 5HP	3P 20	2100 450			3P 20	M - EF-121 0.75HP	14
15				2100 450				16
17					2100 450			18
19	M - HWP-102 5HP	3P 20	2100			3P 20	S.C.	20
21				2100				22
23					2100			24
25	M - CHP-101 5HP	3P 20	2100			3P 20	S.C.	26
27				2100				28
29					2100			30
31	M - CHP-102 5HP	3P 20	2100 63000			3P 250	M - CHL-101 (CHILLER)	32
33				2100 63000				34
35					2100 63000			36
37	S.C.	3P 90	1550			3P 45	E - PANEL LPE	38
39				1390				40
41					1090			42
			99100	98840	98640			

NOTES: 296680
*1. THIS PANEL IS FED FROM ATS-12. REFER TO SHT. E-601 & E-602.
EST. DEMAND KVA: 284.1
EST. DEMAND AMPS: 342.1

PANEL LPE (*1) | 208Y/120 VOLTS, 3 PHASE, 4 WIRE, 225 AMP BUS, 100 AMP, MCB
10,000 RMS SYM. A.I.C. ENCLOSURE TYPE: NEMA 1 MOUNTING: SURFACE SECTION: 1
LOCATION: ELEVATOR MECHINE ROOM 9F-104
E - EQUIPMENT, L - LIGHTS, M - MECHANICAL, MCB - MAIN CIRCUIT BREAKER, MCS - MOLDED CASE SWITCH, MLO - MAIN LUGS ONLY, R - RECEPTACLE, S.C. - SPARE CIRCUIT, S.O. - SPACE ONLY

NO.	CIRCUIT USE	CCT BKR	CONNECTED LOAD VA A	B	C	CCT BKR	CIRCUIT USE	NO.
1	SC	1P 20				1P 20	E - VAV's 100-106	2
3	R/L - ELEVATOR P12 ROOM	1P 20	300			1P 20	E - VAV's 107-110, 112,113	4
5	M - RTU-101 120V CIRCUIT (SMOKE DAMPERS)	1P 20		540 300		1P 20	E - VAV's 114-120	6
7	M - RTU-101 120V CIRCUIT (CONTROLS)	1P 20			140 350	1P 20	E - VAV's 121,122,125,129,130, 151,152	8
9	S.C.	1P 20	600 350			1P 20	E - VAV's 135,140,142,136,148	10
11	S.C.	1P 20		250		1P 20	M - FCU'S 128, 133, 143	12
13	S.C.	1P 20			600	1P 20	S.C.	14
15	S.C.	1P 20				1P 20	S.C.	16
17	S.C.	1P 20				1P 20	S.C.	18
19	S.C.	1P 20				1P 20	S.C.	20
21	S.C.	1P 20				1P 20	S.C.	22
23	S.C.	1P 20				1P 20	S.C.	24
25	S.C.	1P 20	300			1P 20	M - HEAT TRACE (by Mech Contractor)	26
27	S.C.	1P 20		300		1P 20	M - HEAT TRACE (by Mech Contractor)	28
29	S.O.						S.O.	30
31	S.O.						S.O.	32
33	S.O.						S.O.	34
35	S.O.						S.O.	36
37	S.O.						S.O.	38
39	S.O.						S.O.	40
41	S.O.						S.O.	42
			1550	1390	1090			

NOTES: 4030
*1. THIS PANEL IS FED FROM PANEL HPE.
EST. DEMAND KVA: 4.0
EST. DEMAND AMPS: 11.2

PANELBOARDS ON THIS SHEETS:

H8CR L8CR1 L8CR2

HPE LPE

FULLY SPRINKLERED

Revisions	Date

CONSULTANTS:

REGISTERED PROFESSIONAL ENGINEER DOYLE W. MAGNUS 21231 OKLAHOMA 4/1/13

ARCHITECT/ENGINEERS: CERT. OF AUTHORITY 3722 EXP. 06/30/2013
BENHAM / ELLERBE BECKET

Drawing Title: ELECTRICAL PANELBOARD SCHEDULES
Approved: Project Director
Project Title: OKC VA MEDICAL CENTER 8TH FLOOR SICU ADDITION
Location: OKLAHOMA CITY, OK
Date: 04/01/2013 | Checked: JS | Drawn: SS
Project Number: 635-406
Building Number: 001
Drawing Number: E-611
Dwg. -- of --
Office of Construction and Facilities Management
Department of Veterans Affairs

VA FORM 08-6231

File name: P:\OKC\VE\635100430G_okcvamedsicu\20_DESIGN\40_CAD\E\0043E-611.dwg
Date: 04/01/2013 - 1:40pm
User: SMB-32400

ELECTRICAL SYMBOLS

PHONE/DATA SYSTEM

Symbol	Description	HEIGHT
*V *D	COMBINATION VOICE/DATA OUTLET (*V/*D – INDICATES # OF VOICE / DATA JACKS; 2 VOICE / 2 DATA UNLESS NOTED OTHERWISE)	18"
*D	DATA OUTLET (*D – INDICATES # OF DATA JACKS; 4 DATA UNLESS NOTED OTHERWISE)	18"
W	WALL PHONE OUTLET	48"
D W	WALL MOUNTED DICTATION OUTLET	18"
	TERMINAL CABINET	VERIFY
	STATION FIBER OUTLET	VERIFY

NURSE CALL SYSTEM

Symbol	Code	Description	HEIGHT
N * (WALL) / N * (CEILING)	*	NURSE CALL DEVICE	
	M	MASTER STATION	DESK
	M1	MINI MASTER STATION	DESK
	B	SINGLE BEDSIDE STATION	48"
	BI	TWO GANG BED INTERFACE UNIT	18"
	C	CORRIDOR DOME LIGHT	VERIFY
	CB	CODE BLUE CALL STATION	48"
	E	TOILET EMERGENCY STATION	42"
	E1	SHOWER EMERGENCY STATION	48"
	D	DUTY STATION	48"
	S	STAFF STATION	48"
	SA	STAFF ASSIST CALL STATION	48"
	Z	ZONE DOME LIGHT	VERIFY
	CB/SA	DUAL CODE BLUE/STAFF ASSIST CALL STATION	48"
P		PHYSIOLOGICAL MONITORING	48"
C		ANESTHESIA CALL	48"
A		ANESTHESIA	48"
RO		ROOM OCCUPANCY	48"

TELEVISION SYSTEM

Symbol	Description	HEIGHT
TV	WALL MOUNTED TV OUTLET – COAX & CAT 6	VERIFY
TV	CEILING MOUNTED TV OUTLET – COAX & CAT 6	CEILING
P	WALL MOUNTED PROJECTOR OR A/V INPUT	VERIFY
P	CEILING MOUNTED PROJECTOR OR A/V OUTPUT	CEILING

ACCESS CONTROL/CCTV SYSTEMS

Symbol	Description	HEIGHT
ES	SECURITY SYSTEM ELECTRIC STRIKE	VERIFY
ALARM	SECURITY SYSTEM ALARM	VERIFY
EH	SECURITY SYSTEM ELECTRIC HINGE	VERIFY
DM	DOOR POSITION MONITOR	VERIFY
RTE	REQUEST–TO–EXIT DEVICE	VERIFY
CR	CARD READER	42"
CCTV	SECURITY CAMERA	VERIFY
PM	PATIENT MONITORING CAMERA	VERIFY
TV PM	PATIENT MONITORING OUTLET	
• OR ■	SECURITY POINT	VERIFY
KP	KEYPAD	VERIFY
I AVM	INTERCOM – AUDIO/VISUAL MASTER STATION	DESK
I AVC	INTERCOM – AUDIO/VISUAL CALL STATION	48"
I AM	INTERCOM – AUDIO MASTER STATION	DESK
I AC	INTERCOM – AUDIO CALL STATION	48"
I	INTERCOM WITH BLUE LIGHT	VERIFY
ML	MAGNETIC LOCK	VERIFY

SOUND SYSTEM

Symbol	Description	HEIGHT
S	CEILING MOUNTED SPEAKER	CEILING
S OR S	WALL MOUNTED SPEAKER	VERIFY
S	HORN SPEAKER	80"
V	VOLUME CONTROL UNIT	24"
M	MICROPHONE OUTLET	18"

CLOCK

Symbol	Description	HEIGHT
C	WALL MOUNTED CLOCK OUTLET	VERIFY
C	CEILING MOUNTED CLOCK	
C E	WALL MOUNTED ELAPSED TIME CLOCK OUTLET	

MISCELLANEOUS

Symbol	Description	HEIGHT
	RACEWAY INSTALLED CONCEALED IN WALL OR CEILING	
	RACEWAY INSTALLED EXPOSED	
	RACEWAY INSTALLED IN SLAB	
	RACEWAY INSTALLED BELOW SLAB OR GRADE	
	RACEWAY SEAL	
B C	RACEWAY. B: BUSHED. C: CAPPED	
	RACEWAY DOWN	
	RACEWAY UP	
	EXISTING RACEWAY TO REMAIN UNLESS NOTED	
	RACEWAY CONTINUATION	
	WALL MOUNTED BRACKET	
J	WALL BOX	
J	CEILING BOX	
	MISCELLANEOUS ENCLOSURE	
	BELL	96"
	CHIME	96"
	BUZZER	96"
	ANNUNCIATOR LIGHT	VERIFY
D	DICTATION OUTLET	96"
1	KEYNOTE REFERRING TO SPECIFIC NUMBERED NOTE	
MGA	MEDICAL GAS ALARM PANEL	
D	DAMPER OPERATOR	
CO	(CO)CARBON MONOXIDE MONITOR	
O2	(O2)OXYGEN DEPLETION MONITOR	

ELECTRICAL ABBREVIATIONS

A	AMPERE	LA	LIGHTNING ARRESTOR
AC	ALTERNATING CURRENT	LOC	LOCATION
ACB	AIR CIRCUIT BREAKER	LTG	LIGHTING, LIGHT OR LIGHTS
ADD	ADDENDUM	LTFC	LIQUIDTIGHT FLEXIBLE CONDUIT
AF	AMPERE FRAME	MAN	MANUAL
AFC	AVAILABLE FAULT CURRENT	MAX	MAXIMUM
AFD	VARIABLE FREQUENCY DRIVE	MCB	MAIN CIRCUIT BREAKER
AFF	ABOVE FINISHED FLOOR	MCC	MOTOR CONTROL CENTER
AIC	AMPS INTERRUPTING CAPACITY (RATING)	MCCB	MOLDED CASE CIRCUIT BREAKER
AM	ANESTHESIA MONITOR	MECH	MECHANICAL
ANUN	ANUNCIATOR	MIC	MICROWAVE
ARCH	ARCHITECT/ARCHITECTURAL	MIN	MINIMUM
ASD	VARIABLE FREQUENCY DRIVE	MFR	MANUFACTURER
AT	AMPERE TRIP	MFS	MAIN FUSED SWITCH
ATS	AUTOMATIC TRANSFER SWITCH	MH	MAN HOLE
ATU	AIR TERMINAL UNIT	MLO	MAIN LUGS ONLY
AUTO	AUTOMATIC	MTR	MOTOR
AUX. CON.	AUXILLARY CONTACTS	MS	MOTOR STARTER
BFG	BELOW FINISHED GRADE	MSP	MOTOR STARTER PANEL
C	CONDUIT	MSS	MOTOR STARTER SWITCH
CAB	CABINET	MT	EMPTY
CB	CIRCUIT BREAKER	MTD	MOUNTED
CCT, CKT	CIRCUIT	MTS	MANUAL TRANSFER SWITCH
CCTV	CLOSED CIRCUIT TELEVISION	N.C.	NORMALLY CLOSED
CEE	CONCRETE ENCASED ELECTRODE	N/C	NURSE CALL
CLG	CEILING	NCC	NURSE CALL CABINET
CM	CONSTRUCTION MANAGER	NF	NON FUSED
CMT	CONDUIT EMPTY	N.O.	NORMALLY OPEN
COMB	COMBINATION	O.C.	ON CENTER
CONN	CONNECTION, CONNECTOR OR CONNECT	OPER	OPERATE(D)
CONTR	CONTRACTOR	PH OR ø	PHASE
COORD	COORDINATE	P	POLE
COR	CORRIDOR	PB	PUSH BUTTON
CPT	CONTROL POWER TRANSFORMER	PC	PERSONAL COMPUTER
CRT	CATHODE RAY TUBE	PF	POWER FACTOR
CT	CURRENT TRANSFORMER	PH	PHASE
CV	CARDIOVASCULAR	PHY	PHYSIOLOGICAL
DBLS	DOUBLE LUGS	PL	PILOT LIGHT
DC	DIRECT CURRENT	PNL	PANEL
DET	DETAIL	PP	PUSH PLATE
DGP	DATA GATHERING PANEL	PR	PAIR
DIST	DISTRIBUTION	PROC	PROCESSOR
DIV	DIVISION	PT	POTENTIAL TRANSFORMER
DM	DOOR MONITOR	PTR	PRINTER
DN	DOWN	PTT	PUSH TO TEST
DO	DRAW OUT	PTZ	PAN,TILT,ZOOM
DP	DATA PROCESSING	PUB	PULL BOX
DWG	DRAWING	PVC	POLYVINYL CHLORIDE
EA	EACH	PWR	POWER
EKG	ELECTROCARDIOGRAPH SYSTEM	REC	RECEPTACLE
ELEC	ELECTRICAL	REF	REFRIGERATOR
ENDO	ENDOSCOPE	RM	ROOM
EO	ELECTRICAL OUTLET	RO	REVERSE OSMOSIS
EQ	EQUAL	SCA	SHORT CIRCUIT CURRENT AVAILABLE
EQUIP	EQUIPMENT	SCCR	SHORT CIRCUIT CURRENT RATING
EXIST	EXISTING	SCTV	SECURITY CAMERA TV
EP	EXPLOSION PROOF	SPC	SPACE
ELD	END OF LINE DEVICE	SHT	SHEET
EWC	ELECTRIC WATER COOLER	SPEC	SPECIFICATION
F	FUSED	SPR	SPARE
FA	FIRE ALARM	SSW	SAFETY SWITCH
FDR	FEEDER	STR	STARTER
FIN FL	FINISHED FLOOR	SUR	SURFACE
FLA	FULL LOAD AMPS	SW	SWITCH
FUT	FUTURE	SWBD	SWITCHBOARD
FIXT	FIXTURE LTG	SWGR	SWITCHGEAR
FRZ.	FREEZER	TC	TIME CLOCK
FV	FILM VIEWER (ILLUMINATOR)	TEL	TELEPHONE
FWD	FLEXIBLE WIRING DUCT	TERM	TERMINAL
GND OR G	GROUND	TRANSF	TRANSFORMER
GFI	GROUND FAULT INTERRUPTER	TV	TELEVISION
HH	HAND HOLE	TYP	TYPICAL
HP	HORSEPOWER	UFD	UNDER FLOOR DUCT
HTG	HEATING	UG	UNDERGROUND
HTR	HEATER	UH	UNIT HEATER
HZ	HERTZ	UP	UNDERGROUND POWER
IC	INTERRUPTING CAPACITY	V	VOLTS
I/C	INTERCOM	VA	VOLT AMPERE
I/L	INTERLOCK	VCB	VACUUM CIRCUIT BREAKER
IPP	ISOLATED POWER PANEL	VF	VARIABLE FREQUENCY DRIVE
JB OR J	JUNCTION BOX	VFD	VARIABLE FREQUENCY DRIVE
KAIC	KILO AMPS INTERRUPTING CURRENT	VM	VOLT METER
KO	KNOCK OUT	W	WATTS
KW	KILOWATTS	WM	WATT METER
KV	KILOVOLTS	WP	WEATHERPROOF
KVA	KILOVOLT AMPERE	Z	IMPEDENCE

GENERAL NOTES

A. INFORMATION SHOWN ON THIS DRAWING HAS BEEN OBTAINED FROM FIELD NOTES. THE ELECTRICAL CONTRACTOR SHALL VISIT THE SITE PRIOR TO BIDS AND FIELD VERIFY ITEMS SHOWN. ANY DISCREPANCIES BETWEEN THIS DRAWING AND ACTUAL FIELD CONDITIONS SHALL BE BROUGHT TO THE ATTENTION OF THE ENGINEER/CONTRACTOR PRIOR TO BIDS.

B. COOPERATE WITH OTHER TRADES FOR PROPER INSTALLATION OF ITEMS OF EQUIPMENT. CONSULT THE DRAWINGS OF OTHER TRADES OR CRAFTS TO AVOID CONFLICTS WITH EQUIPMENT, ETC. CONFLICTS SHALL BE RESOLVED PRIOR TO ROUGH–IN.

C. LEAVE THE SITE CLEAN AND READY FOR OCCUPANCY. REMOVE DIRT, DEBRIS, EMPTY CARTONS, TOOLS, CONDUIT AND WIRE SCRAPS AND MISCELLANEOUS SPARE EQUIPMENT AND MATERIALS USED IN THIS DIVISION OF THE WORK DURING CONSTRUCTION. COMPONENTS SHALL BE FREE OF DUST, GRIT AND FOREIGN MATERIALS, LEFT AS NEW BEFORE FINAL ACCEPTANCE OF WORK. VACUUM CONSTRUCTION DUST FROM PANELBOARDS AND JUNCTION BOXES.

D. RACEWAY SYSTEMS SHALL BE RUN HORIZONTALLY NEAR CEILING, WITH VERTICAL DROPS NEAR CORNERS, UNLESS NOTED OTHERWISE. CONTRACTOR SHALL FIELD VERIFY ALL CONDITIONS PRIOR TO BID AND SHALL BE RESPONSIBLE TO DETERMINE ROUTING AND QUANTITIES AS REQUIRED TO MAINTAIN CLEARANCE FOR RACEWAY COVER REMOVAL AND PROVIDE ALL OFFSETS, ETC. TO AVOID EXISTING CONDUITS AND DEVICES.

E. ANY NEW WIRING THROUGH FINISHED AREAS MUST BE INSTALLED IN PRE FINISHED SURFACE RACEWAY PAINTED TO MATCH ADJACENT SURFACES.

F. THE ELECTRICAL CONTRACTOR SHALL MAINTAIN EXISTING CIRCUIT CONTINUITY ON ALL LINE AND LOW–VOLTAGE SYSTEMS ON THE SITE THAT ARE TO REMAIN, TEMPORARILY OR PERMANENTLY DUE TO CONSTRUCTION PHASING.

G. EXISTING WORKING ELECTRICAL CONDUITS AND CABLES THAT ARE SUPPORTED ON OR BY CEILING MEMBERS BEING REMOVED TO ACCOMPLISH THE WORK, OR OTHER ITEMS BEING REMOVED, SUCH AS DUCT WORK, PIPING EQUIPMENT, ETC., SHALL BE REMOUNTED TO MEET N.E.C. STANDARDS BY THE ELECTRICAL CONTRACTOR.

ELECTRICAL SYMBOL NOTES

1. INSTALL EQUIPMENT AT THE MOUNTING HEIGHT INDICATED UNLESS INDICATED OTHERWISE. MOUNTING HEIGHTS INDICATED ON ARCHITECTURAL WALL ELEVATIONS TAKE PRECEDENCE OVER MOUNTING HEIGHTS LISTED ABOVE. MOUNTING HEIGHTS ARE TO CENTER OF DEVICE FROM FINISHED FLOOR.
2. CAPITAL LETTERS ADJACENT TO SYMBOLS INDICATE UNIT TYPE– SEE SPECS.
3. DASHED SYMBOLS INDICATE EXISTING FIXTURES AND DEVICES.
4. SWITCH NEAREST DOOR TO CONTROL OUTBOARD LAMPS, OTHER SWITCH TO CONTROL INBOARD LAMPS.

DRAWING INDEX

SHEET NUM.	SHEET NAME
1-EY01	COMMUNICATIONS TITLE AND SYMBOL SHEET
1-EY10B	COMMUNICATIONS EIGHTH FLOOR PLAN
1-EY108	COMMUNICATIONS EIGHTH FLOOR PLAN
1-EY109	COMMUNICATIONS NINTH FLOOR PLAN
1-EY501	COMMUNICATIONS DETAILS
1-EY502	COMMUNICATIONS DETAILS

FULLY SPRINKLERED

Revisions:	Date

STATE OF OKLAHOMA · RICK A. LINCICOME · NO. 3810 · WASHINGTON, D.C. · LICENSED ARCHITECT

ARCHITECT/ENGINEERS

BENHAM an SAIC company / ELLERBE BECKET

Drawing Title: COMMUNICATIONS TITLE AND SYMBOL SHEET

Approved: Project Director

Project Title: OKC VA Medical Center 8th Floor SICU Addition

Location

Date 04/01/13 | Checked D.R. | Drawn J.G.

Project Number 635–406

Building Number

Drawing Number 1–EY01

Dwg. of

Construction & Facilities Management CFM · Department of Veterans Affairs

File Path

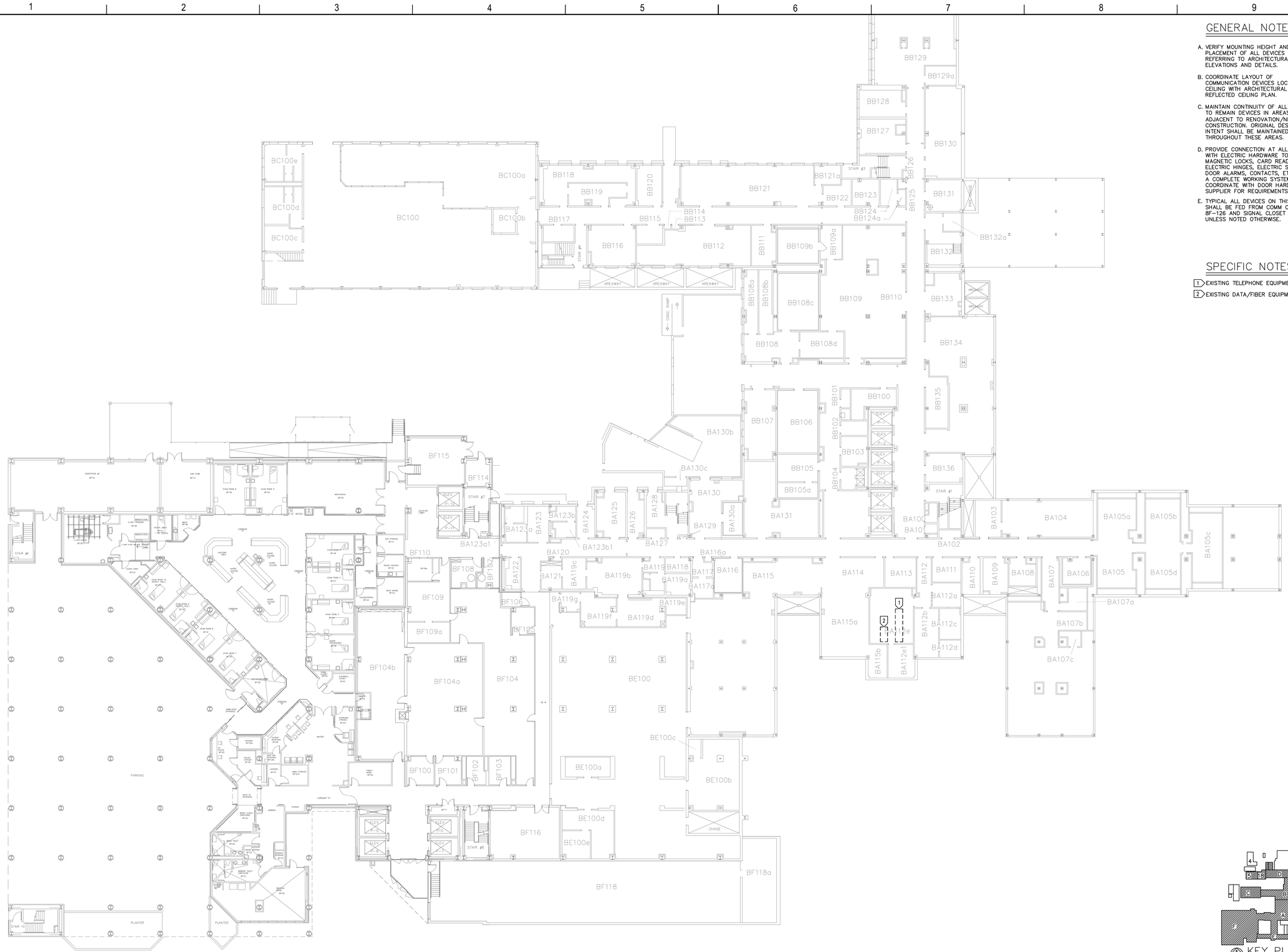

1 OVERALL BASEMENT FLOOR PLAN

1/16"=1'-0"

GENERAL NOTES:

A. VERIFY MOUNTING HEIGHT AND PLACEMENT OF ALL DEVICES BY REFERRING TO ARCHITECTURAL PLANS, ELEVATIONS AND DETAILS.

B. COORDINATE LAYOUT OF COMMUNICATION DEVICES LOCATED IN CEILING WITH ARCHITECTURAL REFLECTED CEILING PLAN.

C. MAINTAIN CONTINUITY OF ALL EXISTING TO REMAIN DEVICES IN AREAS ADJACENT TO RENOVATION/NEW CONSTRUCTION. ORIGINAL DESIGN INTENT SHALL BE MAINTAINED THROUGHOUT THESE AREAS.

D. PROVIDE CONNECTION AT ALL DOORS WITH ELECTRIC HARDWARE TO ALL MAGNETIC LOCKS, CARD READERS, ELECTRIC HINGES, ELECTRIC STRIKES, DOOR ALARMS, CONTACTS, ETC... FOR A COMPLETE WORKING SYSTEM. COORDINATE WITH DOOR HARDWARE SUPPLIER FOR REQUIREMENTS.

E. TYPICAL ALL DEVICES ON THIS SHEET SHALL BE FED FROM COMM CLOSET 8F-126 AND SIGNAL CLOSET 8F-143 UNLESS NOTED OTHERWISE.

SPECIFIC NOTES:

1. EXISTING TELEPHONE EQUIPMENT RACK.
2. EXISTING DATA/FIBER EQUIPMENT RACK.

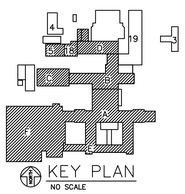

KEY PLAN
NO SCALE

FULLY SPRINKLERED

Revisions:	Date

STATE OF OKLAHOMA
NICK A. LINCICOME
NO. 3510
WASHINGTON, D.C.
LICENSED ARCHITECT

ARCHITECT/ENGINEERS

BENHAM an SAIC company / ELLERBE BECKET

Drawing Title: COMMUNICATIONS BASEMENT FLOOR PLAN

Approved: Project Director

Project Title: OKC VA Medical Center 8th Floor SICU Addition

Location

Date	Checked	Drawn
04/01/13	D.R.	J.G.

Project Number: 635-406

Building Number

Drawing Number: 1-EY10B

Dwg. of

Construction & Facilities Management CFM Department of Veterans Affairs

File Path

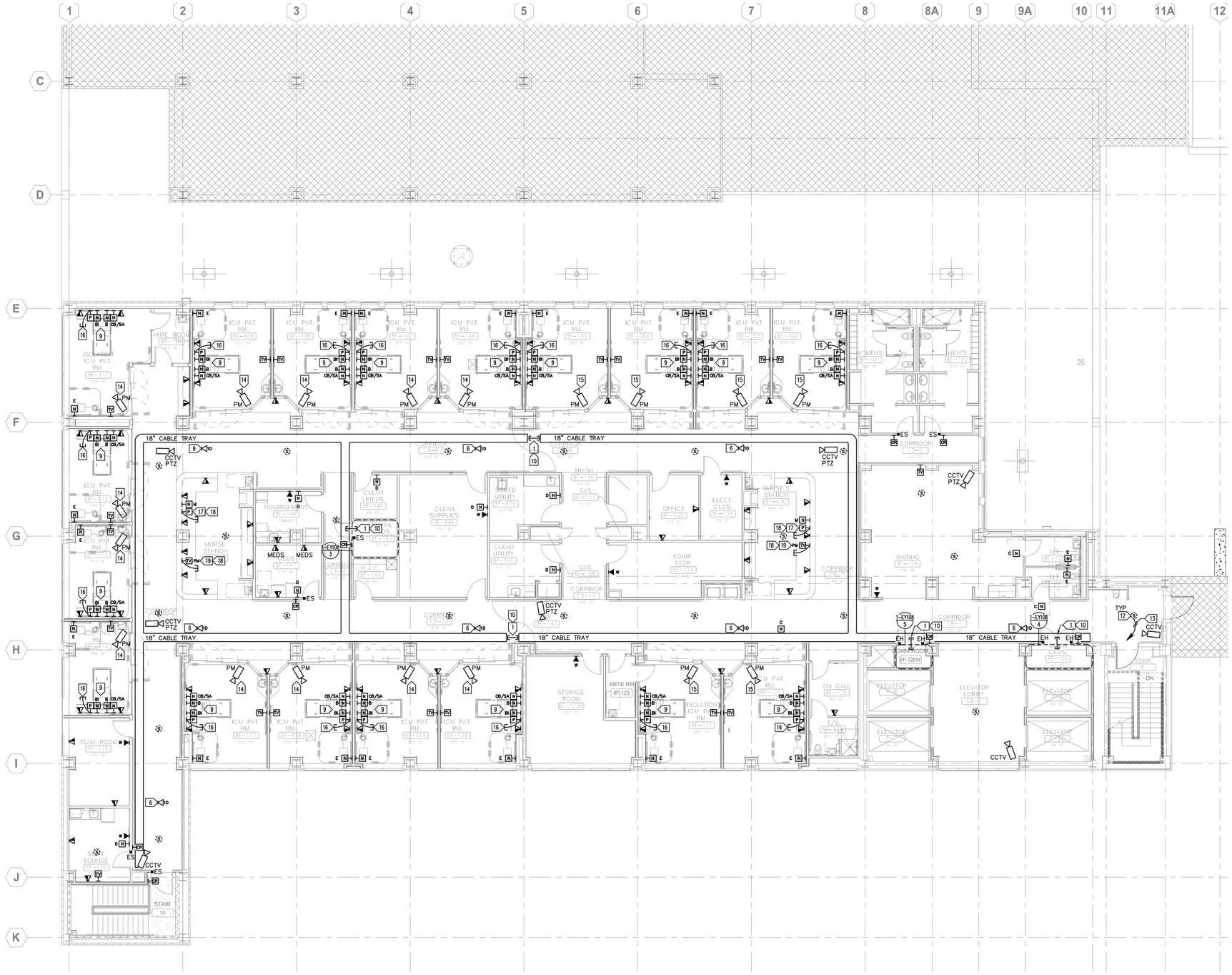

1 COMMUNICATIONS EIGHTH FLOOR PLAN

1/8"=1'-0"

GENERAL NOTES:

A. VERIFY MOUNTING HEIGHT AND PLACEMENT OF ALL DEVICES BY REFERRING TO ARCHITECTURAL PLANS, ELEVATIONS AND DETAILS.

B. COORDINATE LAYOUT OF COMMUNICATION DEVICES LOCATED IN CEILING WITH ARCHITECTURAL REFLECTED CEILING PLAN.

C. MAINTAIN CONTINUITY OF ALL EXISTING TO REMAIN DEVICES IN AREAS ADJACENT TO RENOVATION/NEW CONSTRUCTION. ORIGINAL DESIGN INTENT SHALL BE MAINTAINED THROUGHOUT THESE AREAS.

D. PROVIDE CONNECTION AT ALL DOORS WITH ELECTRIC HARDWARE TO ALL MAGNETIC LOCKS, CARD READERS, ELECTRIC HINGES, ELECTRIC STRIKES, DOOR ALARMS, CONTACTS, ETC... FOR A COMPLETE WORKING SYSTEM. COORDINATE WITH DOOR HARDWARE SUPPLIER FOR REQUIREMENTS.

E. TYPICAL ALL DEVICES ON THIS SHEET SHALL BE FED FROM COMM CLOSET 8F-126 AND SIGNAL CLOSET 8F-143 UNLESS NOTED OTHERWISE.

SPECIFIC NOTES:

1. PROVIDE RE-ENTERABLE4" MECHANICAL FIRE/SMOKE STOP SYSTEM, 'EZ PATH', 'HILTI' OR APPROVED EQUAL.
2. PROVIDE VOICE/DATA EQUIPMENT RACK WITH PATCH PANELS FOR CAT 6A WORKSTATION CONNECTIONS.
3. PROVIDE TELECOMMUNICATIONS GROUND BAR (TGB). COORDINATE ACTUAL LOCATION WITH TELECOMMUNICATIONS EQUIPMENT SUPPLIER.
4. PROVIDE ¾" FIRE RETARDENT PLYWOOD BACKBOARD FOR EQUIPMENT MOUNTING, ALL WALLS.
5. PROVIDE 12"W BASKET CABLE TRAY.
6. PROVIDE ONE DATA JACK IN THE CEILING FOR WIRELESS ACCESS POINT.
7. NURSE CALL NETWORK CONTROLLER
8. FIRE ALARM CABINET, REFER TO FIRE ALARM PLANS.
9. DEVICES LOCATED IN PATIENT HEADWALL. COORDINATE WITH ARCHITECTURAL ELEVATIONS AND HEADWALL SUPPLIER.
10. PROVIDE (3) FIRESTOP ASSEMBLIES AT THIS LOCATION.
11. DATA RACK FOR VA FURNISHED SERVERS FOR PHYSIOLOGICAL MONITORING SYSTEM.
12. UL LISTED DUAL VOICE COIL SPEAKER TO BE PROVIDED BY THE FIRE ALARM SYSTEM SUPPLIER (TYPICAL). COORDINATE WITH FIRE ALARM PLANS FOR ACTUAL LOCATIONS OF SPEAKERS.
13. PROVIDE CONNECTION TO EXISTING OVERHEAD PAGING SYSTEM.
14. THIS PATIENT ROOM TO BE MONITORED AT NURSE STATION 8F-148.
15. THIS PATIENT ROOM TO BE MONITORED AT NURSE STATION 8F-130.
16. PROVIDE 1.25" CONDUIT STUBBED INTO ACCESSIBLE CEILING SPACE FOR PHYSIOLOGICAL MONITORING CABLE.
17. PROVIDE 4 11/16" SQUARE J-BOX WITH DOUBLE-GANG PLASTER RING WITH GROMMETED COVERPLATE FOR PHYSIOLOGICAL MONITORING CABLING. COORDINATE REQUIREMENTS WITH VA COTR.
18. PROVIDE (2) 1.25" CONDUITS STUBBED INTO ACCESSIBLE CEILING SPACE FOR INDICATED SYSTEM CABLING.
19. PROVIDE 4 11/16" SQUARE J-BOX WITH DOUBLE-GANG PLASTER RING WITH GROMMETTED COVERPLATE FOR PATIENT MONITORING CABLING. COORDINATE REQUIREMENTS WITH VA COTR.
20. PROVIDE WALL MOUNTED MATV EQUIPMENT (AMPLIFIERS, TERMINATION, ECT) AS SPECIFIED.
21. PROVIDE PUBLIC ADDRESS EQUIPMENT (AMPLIFIERS, TERMINATIONS, ECT) AS SPECIFIED.
22. PROVIDE WALL MOUNTED PATIENT MONITORING CAMERA SYSTEM EQUIPMENT AS SPECIFIED.
23. PROVIDE WALL MOUNTED CCTV CAMERA SYSTEM EQUIPMENT AS SPECIFIED.

2 NOT USED

1/8"=1'-0"

3 COMMUNICATIONS ENLARGED FLOOR PLANS
SIGNAL CLOSET 8F-143

1/4"=1'-0"

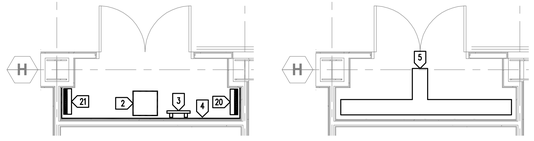

4 COMMUNICATIONS ENLARGED FLOOR PLANS
COMM CLOSET 8F-126

1/4"=1'-0"

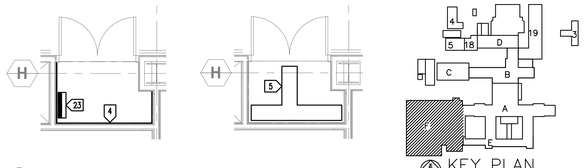

5 COMMUNICATIONS ENLARGED FLOOR PLANS
COMM ROOM 8F-126W

1/4"=1'-0"

KEY PLAN
NO SCALE

FULLY SPRINKLERED

Revisions:	Date

STATE OF OKLAHOMA
JACK K. LINCOLNE
NO. 3610
WASHINGTON, D.C.
LICENSED ARCHITECT

ARCHITECT/ENGINEERS

BENHAM an SAIC company / ELLERBE BECKET

Drawing Title: COMMUNICATIONS EIGHTH FLOOR PLAN

Approved: Project Director

Project Title: OKC VA Medical Center 8th Floor SICU Addition

Location

Date 04/01/13 | Checked D.R. | Drawn J.G.

Project Number 635-406

Building Number

Drawing Number 1-EY108

Dwg. of

Construction & Facilities Management CFM Department of Veterans Affairs

File Path

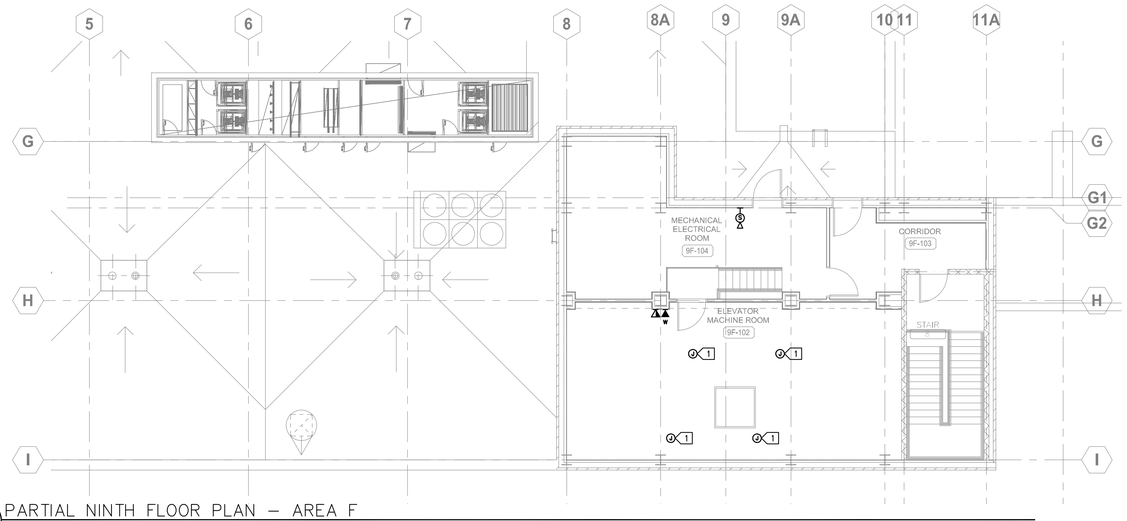

2 PARTIAL NINTH FLOOR PLAN – AREA F

1/8"=1'-0"

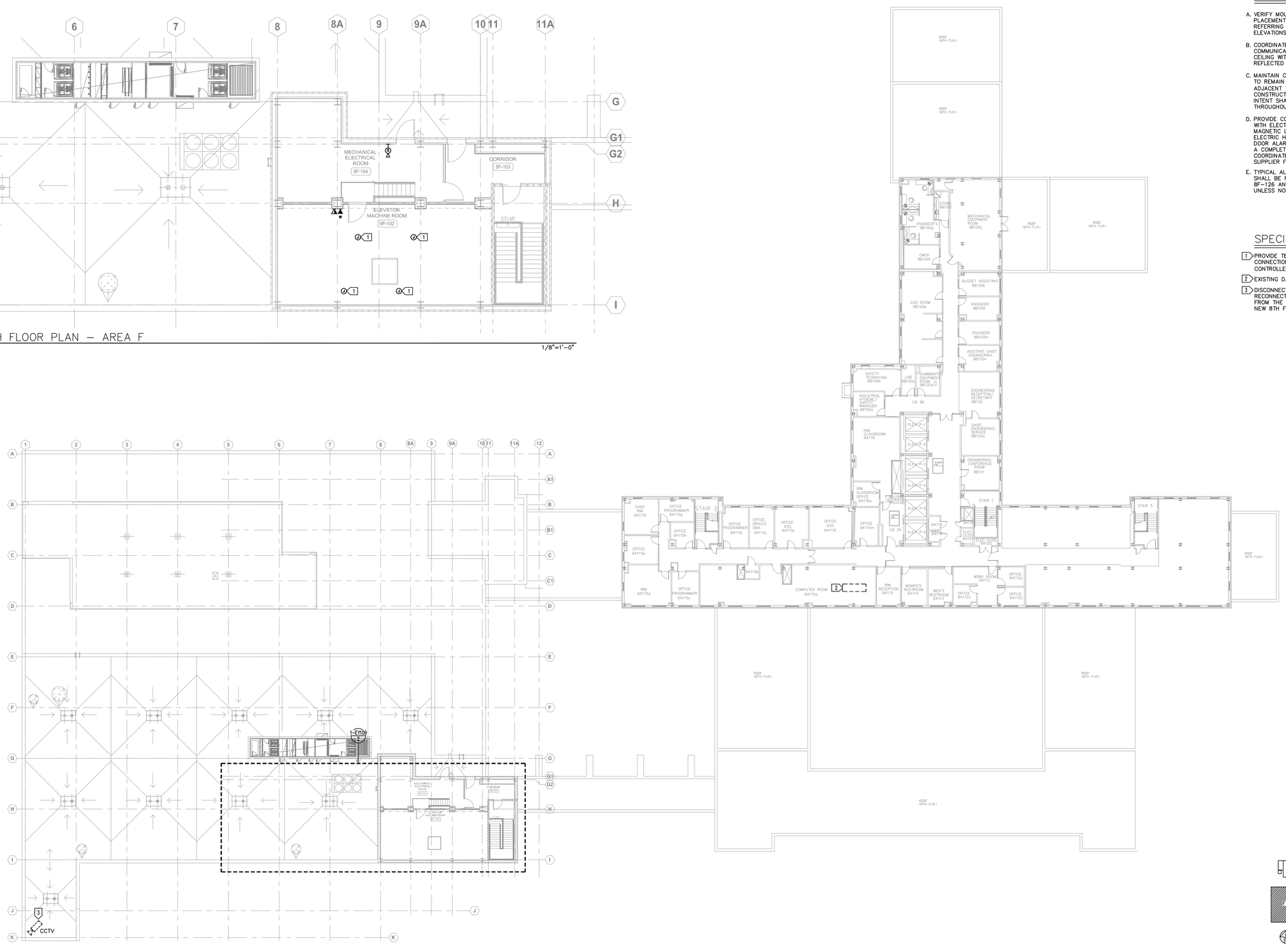

1 OVERALL NINTH FLOOR PLAN

1/16"=1'-0"

GENERAL NOTES:

A. VERIFY MOUNTING HEIGHT AND PLACEMENT OF ALL DEVICES BY REFERRING TO ARCHITECTURAL PLANS, ELEVATIONS AND DETAILS.

B. COORDINATE LAYOUT OF COMMUNICATION DEVICES LOCATED IN CEILING WITH ARCHITECTURAL REFLECTED CEILING PLAN.

C. MAINTAIN CONTINUITY OF ALL EXISTING TO REMAIN DEVICES IN AREAS ADJACENT TO RENOVATION/NEW CONSTRUCTION. ORIGINAL DESIGN INTENT SHALL BE MAINTAINED THROUGHOUT THESE AREAS.

D. PROVIDE CONNECTION AT ALL DOORS WITH ELECTRIC HARDWARE TO ALL MAGNETIC LOCKS, CARD READERS, ELECTRIC HINGES, ELECTRIC STRIKES, DOOR ALARMS, CONTACTS, ETC... FOR A COMPLETE WORKING SYSTEM. COORDINATE WITH DOOR HARDWARE SUPPLIER FOR REQUIREMENTS.

E. TYPICAL ALL DEVICES ON THIS SHEET SHALL BE FED FROM COMM CLOSET 8F-126 AND SIGNAL CLOSET 8F-143 UNLESS NOTED OTHERWISE.

SPECIFIC NOTES:

1. PROVIDE TELEPHONE CABLING CONNECTIONS TO ELEVATOR CONTROLLER IN 3/4"C.
2. EXISTING DATA/FIBER EQUIPMENT RACK.
3. DISCONNECT, RELOCATE AND RECONNECT EXISTING SECURITY CAMERA FROM THE 7TH FLOOR ROOF TO THE NEW 8TH FLOOR ROOF.

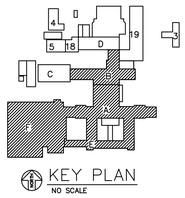

KEY PLAN
NO SCALE

FULLY SPRINKLERED

Revisions:	Date

ARCHITECT/ENGINEERS

BENHAM an SAIC company / ELLERBE BECKET

Drawing Title: COMMUNICATIONS NINTH FLOOR PLAN

Approved: Project Director

Project Title: OKC VA Medical Center 8th Floor SICU Addition

Location

Date 04/01/13 | Checked D.R. | Drawn J.G.

Project Number 635–406

Building Number

Drawing Number 1–EY109

Dwg. of

Construction & Facilities Management CFM

Department of Veterans Affairs

File Path

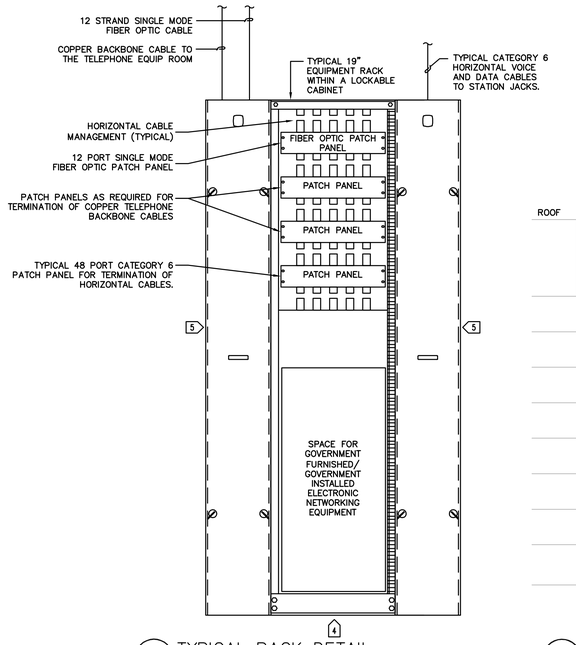

1 TYPICAL RACK DETAIL

NTS

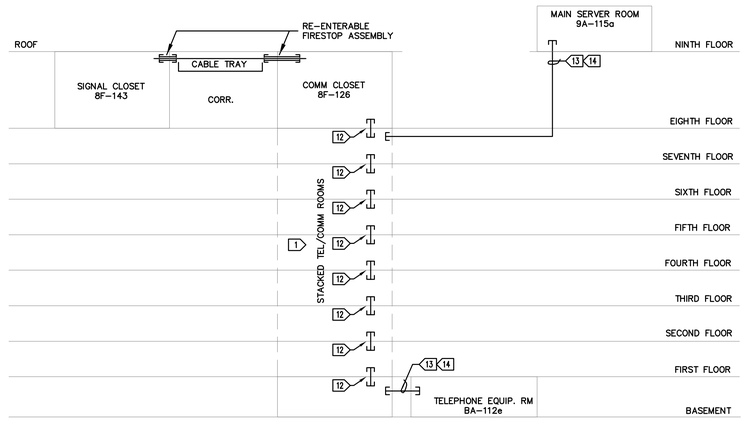

2 CABLING PATHWAY

NTS

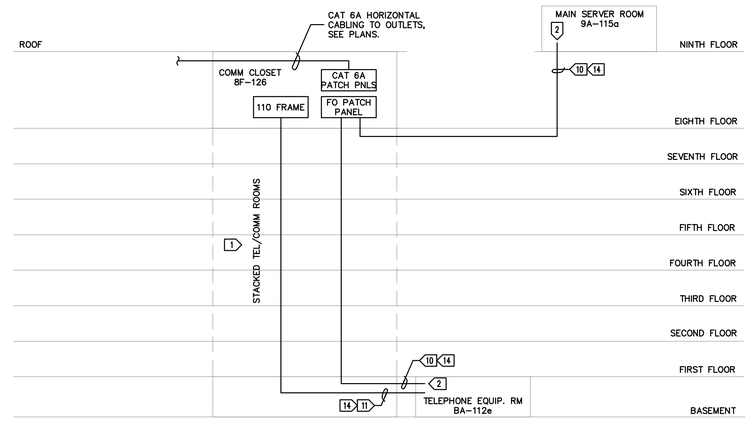

3 VOICE/DATA SYSTEM ONE-LINE DIAGRAM
PARTIAL ONE-LINE OF BUILDINGS OF RENOVATION

NTS

GENERAL NOTES:

A. REFER TO SPECIFICATIONS AND COMMUNICATIONS DRAWINGS FOR DETAILS OF DEVICES.

B. ALL FIRESTOPPING SHALL BE A UL LISTED SYSTEM.

C. ALL TELECOMMUNICATIONS CABLING SHALL BE INSTALLED IN CONDUIT FROM THE OUTLET BOXES UP TO THE NEAREST ACCESSIBLE CEILING, THEN CONCEALED ABOVE THE CEILING (IN A J-HOOK SYSTEM) TO THE CABLE TRAY.

D. MAINTAIN A CLEARANCE OF AT LEAST 12" FROM CONDUIT AND CABLE USED FOR ELECTRICAL POWER DISTRIBUTION AND 63" FROM MOTORS AND TRANSFORMERS.

E. PROVIDE CABLE SUPPORTS (J-HOOKS) AT 5'-0" MAXIMUM SPACING.

ELECTRICAL NOTES:

1. SECURE RISER CABLING, PROVIDE 'D' RINGS SECURED TO THE BUILDING STRUCTURE, PROVIDE AS REQUIRED, COORDINATE WITH EXISTING SERVICES IN SHARED SPACE.
2. COORDINATE WITH OWNER, FIBER TERMINATION POINT.
3. PROVIDE EQUIPMENT RACK(S) IN ROOM AS PER DETAIL 1 OF THIS PAGE AND PER SPEC SECTION 27 15 00.
4. COORDINATE WITH OWNER FOR RACK LAYOUT. QUANTITIES OF PATCH PANELS ARE APPROXIMATE. PROVIDE PATCH PANEL QUANTITIES WITH SUFFICIENT PORTS TO ACCOMMODATE THE INSTALLED CABLE PLANT PLUS 50 PERCENT SPARES.
5. PROVIDE VERTICAL CABLE MANAGEMENT AS SPECIFIED IN 27 15 00.
6. PROVIDE J-HOOK SYSTEM AS SHOWN IN DETAIL 5 OF THIS SHEET.
7. PROVIDE CONDUITS/FIRESTOPPING WITH THE SAME OR LARGER CABLE FILL AS THE CABLE TRAY OR J-HOOK SYSTEM. FIRESTOPPING SHALL NOT LIMIT THE FUTURE CAPACITY.
8. INSTALL INSULATED GREEN COPPER GROUND WIRE IN 1/2" MINIMUM SIZE CONDUIT AS INDICATED.
9. PROVIDE COPPER CABLING AS INDICATED ON FLOOR PLANS.
10. PROVIDE (12) SINGLE MODE FIBER OPTIC CABLE, REFER TO SPECIFICATIONS SECTION 27 11 00 FOR FIBER OPTIC CABLE TYPE.
11. 300 PAIR CAT 3.
12. PROVIDE 3-4" CONDUIT SLEEVES THROUGH THE FLOOR AS INDICATED.
13. PROVIDE J-HOOK SYSTEM AS REQUIRED FOR SUPPORT OF CABLING FROM THIS ROOM.
14. COORDINATE ACTUAL ROUTE OF NEW TELECOM SYSTEM CABLING WITH VAMC.
15. PROVIDE CONTROLLER ABOVE CEILING OR IN BACK BOX.
16. PROVIDE CABLING AND CONNECTIONS FROM NURSE CALL CONTROLLER TO THE EXISTING NURSE CALL HEADEND. COORDINATE CABLING REQUIREMENTS WITH NURSE CALL VENDOR.

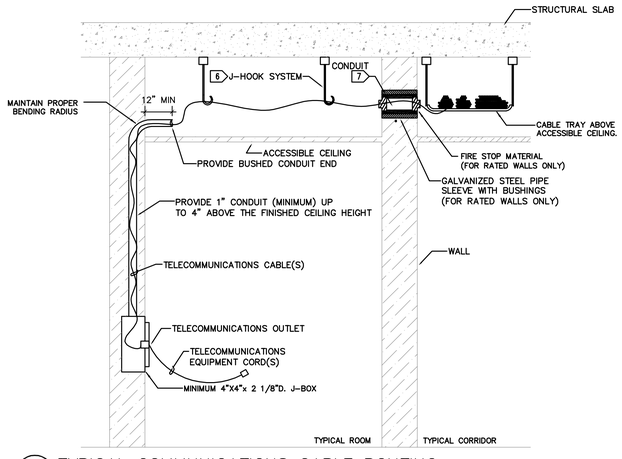

4 TYPICAL COMMUNICATIONS CABLE ROUTING

NTS

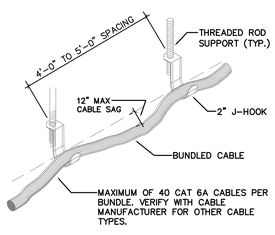

5 TYPICAL J-HOOK SYSTEM

NTS

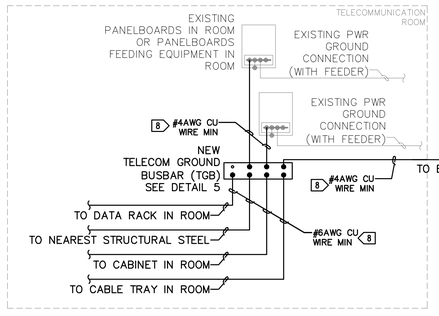

6 TYPICAL TELECOM GROUNDING DIAGRAM

NTS

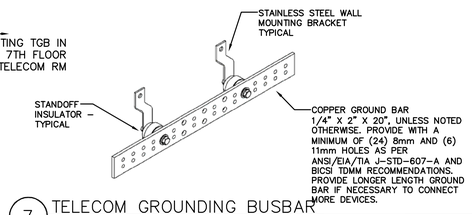

7 TELECOM GROUNDING BUSBAR TGB

NTS

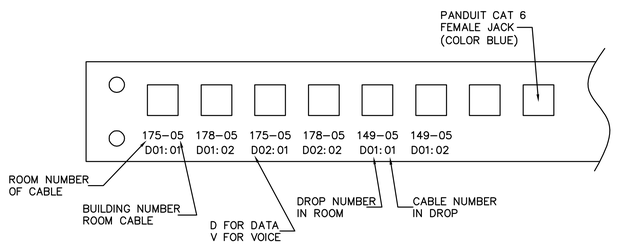

8 WIRING CLOSET LABELING GUIDE

NTS

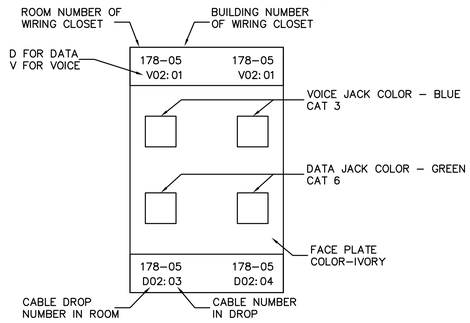

9 FACE PLATE LABELING CONVENTIONS

NTS

FULLY SPRINKLERED

Revisions:	Date

STATE OF OKLAHOMA JACK A. LINCOLNE NO. 3010 WASHINGTON, D.C. LICENSED ARCHITECT

ARCHITECT/ENGINEERS

BENHAM an SAIC company / ELLERBE BECKET

Drawing Title: COMMUNICATIONS DETAILS

Approved: Project Director

Project Title: OKC VA Medical Center 8th Floor SICU Addition

Location

Date 04/01/13 | Checked D.R. | Drawn J.G.

Project Number 635-406

Building Number

Drawing Number 1-EY501

Dwg. of

Construction & Facilities Management CFM Department of Veterans Affairs

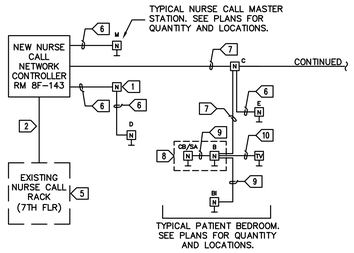

1 NURSE CALL RISER DIAGRAM

NTS

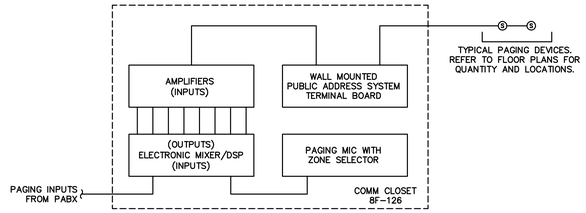

2 PAGING ONE-LINE DIAGRAM

NTS

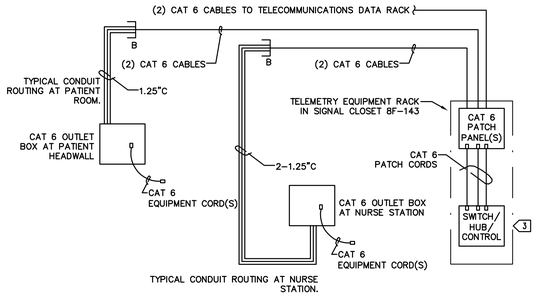

3 TYPICAL TELEMETRY/PATIENT MONITORING SYSTEM DIAGRAM

NTS

GENERAL NOTES:

A. REFER TO SPECIFICATIONS AND COMMUNICATIONS DRAWINGS FOR DETAILS OF DEVICES.

B. ALL FIRESTOPPING SHALL BE A UL LISTED SYSTEM.

C. ALL TELECOMMUNICATIONS CABLING SHALL BE INSTALLED IN CONDUIT FROM THE OUTLET BOXES UP TO THE NEAREST ACCESSIBLE CEILING, THEN CONCEALED ABOVE THE CEILING (IN A J-HOOK SYSTEM) TO THE CABLE TRAY.

D. MAINTAIN A CLEARANCE OF AT LEAST 12" FROM CONDUIT AND CABLE USED FOR ELECTRICAL POWER DISTRIBUTION AND 63" FROM MOTORS AND TRANSFORMERS.

E. PROVIDE CABLE SUPPORTS (J-HOOKS) AT 5'-0" MAXIMUM SPACING.

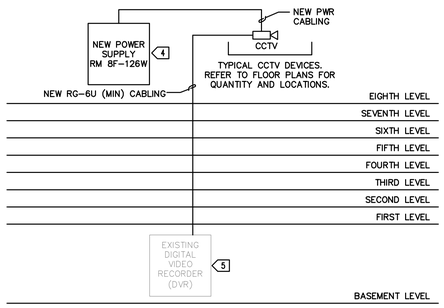

4 CCTV SYSTEM ONE-LINE DIAGRAM
PARTIAL ONE-LINE OF BUILDINGS OF RENOVATION

NTS

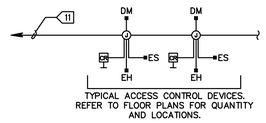

5 ACCESS CONTROL SYSTEM ONE-LINE DIAGRAM
PARTIAL ONE-LINE OF BUILDINGS OF RENOVATION

NTS

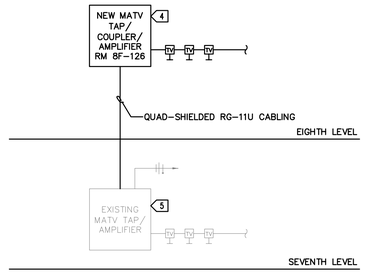

6 MASTER ANTENNA TELEVISION (MATV) SYSTEM ONE-LINE DIAGRAM
PARTIAL ONE-LINE OF BUILDINGS OF RENOVATION

NTS

ELECTRICAL NOTES:

1. PROVIDE CONTROLLER ABOVE CEILING OR IN BACK BOX.
2. PROVIDE CABLING AND CONNECTIONS FROM NURSE CALL CONTROLLER TO THE EXISTING NURSE CALL HEADEND. COORDINATE CABLING REQUIREMENTS WITH NURSE CALL VENDOR.
3. PROVIDE CABLING AND INSTALL SWITCH/HUB/CONTROL AND ANTENNAE FURNISHED BY THE MEDICAL EQUIPMENT SUPPLIER OR OWNER. PROVIDE VENTED RACK SHELVES IF SUPPLIER/OWNER PROVIDED EQUIPMENT IS NOT RACK MOUNTED. COORDINATE WITH SUPPLIER/OWNER FOR SHELF QUANTITIES.
4. PROVIDE DEDICATED 120V, 20A UPS/CRITICAL POWER CONNECTION(S) TO PANEL/CABINET. COORDINATE WITH POWER DRAWINGS.
5. FIELD VERIFY ACTUAL LOCATION.
6. 3/4" CONDUIT WITH NURSE CALL SYSTEM WIRING AS REQUIRED.
7. 1" CONDUIT WITH NURSE CALL SYSTEM WIRING AS REQUIRED.
8. PATIENT HEADWALL RAIL SYSTEM. TERMINATE CONDUITS AT LOW VOLTAGE SECTION OF RAIL SYSTEM.
9. NURSE CALL SYSTEM WIRING ROUTED THROUGH LOW VOLTAGE SECTION OF PATIENT HEADWALL RAIL SYSTEM.
10. 1/2" CONDUIT WITH CONTROL WIRING AS REQUIRED.
11. PROVIDE CAT 6 CABLE TO TELECOMMUNICATIONS DATA RACK.

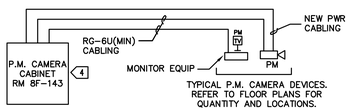

7 PATIENT MONITORING CAMERA SYSTEM ONE-LINE DIAGRAM
PARTIAL ONE-LINE OF BUILDINGS OF RENOVATION

NTS

FULLY SPRINKLERED

Revisions:	Date

STATE OF OKLAHOMA, STACY L. LINGO, LICENSED ARCHITECT, NO. 3010

ARCHITECT/ENGINEERS

BENHAM an SAIC company / ELLERBE BECKET

Drawing Title: COMMUNICATIONS DETAILS

Approved: Project Director

Project Title: OKC VA Medical Center 8th Floor SICU Addition

Location

Date 04/01/13 | Checked D.R. | Drawn J.G.

Project Number 635-406

Building Number

Drawing Number 1-EY502

Dwg. of

Construction & Facilities Management CFM

Department of Veterans Affairs