FULLY SPRINKLERED

DRAWING SYMBOLS

- 2 / H4 — DETAIL NUMBER; DRAWING NUMBER WHERE DRAWN
- A / H7 — SECTION LETTER; DRAWING NUMBER WHERE DRAWN
- 1-SF3 — BUILDING NO. WHERE EQUIPMENT IS LOCATED; EQUIPMENT ABBREVIATION (SUPPLY FAN); SUPPLY FAN NO.3 IN BUILDING NO.1
- TYPICAL UNIT NO.
- 1-01 — TERMINAL UNIT DESIGNATION; AIR HANDLING UNIT NUMBER

DUCTWORK SYMBOLS

UP DN	SUPPLY DUCT (UP & DOWN)
UP DN	RETURN DUCT (UP & DOWN)
UP DN	EXHAUST DUCT (UP & DOWN)
	CEILING DIFFUSERS (FOUR WAY BLOW UNLESS OTHERWISE NOTED)
	EXHAUST OR RETURN CEILING REGISTER OR GRILLE
	SUPPLY TOP REGISTER OR GRILLE (WALL TYPE)
	EXHAUST OR RETURN BOTTOM REGISTER OR GRILLE, (WALL TYPE)
	EXHAUST OR RETURN TOP REGISTER OR GRILLE, (WALL TYPE)
	VANED ELBOW & AIR SPLIT TYPE DUCT TAKE-OFF
R	INCLINED RISE, IN DIRECTION OF AIR FLOW
D	INCLINED DROP, IN DIRECTION OF AIR FLOW
FC	FLEXIBLE CONNECTION
	VANED ELBOW (PROVIDE ALL SQUARE OR RECTANGULAR ELBOWS WITH VANES EVEN IF SYMBOL IS MISSING)
	STANDARD RADIUS ELBOW
10/8	NEW DUCT - WIDTH X DEPTH
	STAINLESS STEEL DUCT
	ACOUSTICAL DUCT LINING
	MANUAL VOLUME DAMPER
	FIRE DAMPER
9'-6"	APPROXIMATE ELEVATION FROM FLOOR TO CENTER OF LISTED SIZE OF DUCT, PIPE, DEVICE OR EQUIPMENT ITEM. (TO BE USED AS AN AID IN COORDINATING THE VARIOUS TRADES.)
U/C	DOOR UNDERCUT BY GENERAL CONTRACTOR

PIPING SYMBOLS

GENERAL	
W	DOMESTIC COLD WATER
HEATING	
HPS (125)	HIGH PRESSURE STEAM (60 PSIG AND ABOVE) NUMBER INDICATES STEAM PRESSURE
HPR	HIGH PRESSURE STEAM CONDENSATE RETURN
MPS (30)	MEDIUM PRESSURE STEAM (16 PSIG THRU 59 PSIG) NUMBER INDICATES STEAM PRESSURE
MPR	MEDIUM PRESSURE STEAM CONDENSATE RETURN
LPS (5)	LOW PRESSURE STEAM (15 PSIG & BELOW) NUMBER INDICATES STEAM PRESSURE
LPR	LOW PRESSURE STEAM CONDENSATE RETURN
PC	PUMPED CONDENSATE RETURN
HWS	HEATING HOT WATER SUPPLY
HWR	HEATING HOT WATER RETURN
V	VENT LINE
GHS	HOT GLYCOL WATER SUPPLY
GHR	HOT GLYCOL WATER RETURN
AIR CONDITIONING	
CHS	CHILLED WATER SUPPLY
CHR	CHILLED WATER RETURN
D	DRAIN LINE
HWS/CHS	COMBINATION HOT/CHILLED WATER SUPPLY
HWR/CHR	COMBINATION HOT/CHILLED WATER RETURN
MU	TREATED DOMESTIC MAKE-UP WATER FOR HUMIDIFIER
GMU	GLYCOL MAKEUP WATER
GCS	CHILLED GLYCOL WATER SUPPLY
GCR	CHILLED GLYCOL WATER RETURN

GENERAL

M	FLOW METER
	DIRECTION OF PIPE PITCH (DOWN)
	DIRECTION OF FLOW
	PIPE ANCHOR
	PIPE GUIDE
	REDUCER OR INCREASER
	ECCENTRIC REDUCER
	TOP CONNECTION, 45 DEG. OR 90 DEG.
	BOTTOM CONNECTION, 45 DEG. OR 90 DEG.
	SIDE CONNECTION
	CAPPED OUTLET
	RISE OR DROP IN PIPE
	UNION
	ORIFICE UNION
	PIPE UP
	PIPE DOWN
	POINT OF CONNECTION BETWEEN NEW AND EXISTING WORK.
	INVERTED BUCKET TRAP SET INCLUDING PIPING ACCESSORIES (SEE STANDARD DETAIL)
	FLOAT AND THERMOSTATIC TRAP SET INCLUDING PIPING ACCESSORIES (SEE STANDARD DETAIL)
	THERMOSTATIC TRAP
	STRAINER
	THERMOMETER
	PRESSURE GAGE
	EXISTING PIPE TO BE REMOVED
	TEST PLUG (PRESSURE/TEMPERATURE)
ET	EXPANSION TANK PIPE
	PIPE MOUNTED DDC TEMPERATURE SENSOR

VALVES

	GATE VALVE
	GLOBE VALVE
C	GATE VALVE WITH 3/4" HOSE END ADAPTER
	CHECK VALVE
	ANGLE GLOBE VALVE
	BUTTERFLY VALVE
	BALL VALVE
	COMBINATION BALANCING/SHUT-OFF VALVE
	CIRCUIT SETTER
S S	STRAIGHT-THRU MODULATING CONTROL VALVE
S S	STRAIGHT-THRU TWO-POSITION CONTROL VALVE
	THREE-WAY MODULATING CONTROL VALVE
	AUTOMATIC FLOW CONTROL VALVE
	SAFETY VALVE OR PRESSURE RELIEF
	PRESSURE REDUCING VALVE
	MANUAL AIR VENT

CONTROLS

T H	ROOM CONTROL: THERMOSTAT, HUMIDISTAT
T	REMOTE BULB THERMOSTAT
T	DUCT OR PIPE THERMOSTAT (NOTE 1: PROVIDE 12" MIN. LENGTH IN DUCT WHEN SPACE PERMITS)
T	DUCT THERMOSTAT WITH AVERAGING ELEMENT
T H	ROOM SENSOR: TEMPERATURE, HUMIDITY
T	DUCT OR PIPE TEMP. SENSOR
H	DUCT HUMIDITY SENSOR
SP	DUCT STATIC PRESSURE SENSOR
T	DUCT TEMPERATURE SENSOR WITH AVERAGING ELEMENT
F S	SMOKE DETECTOR (SEE ELECTRICAL SPECIFICATIONS)
H1 N	CONTROL CIRCUIT CONN.
dP	DIFFERENTIAL PRESSURE SWITCH
DP SP	DIFFERENTIAL OR STATIC PRESSURE TRANSMITTER
CS	CURRENT SENSING RELAY

ABBREVIATIONS

A/BCW	COMBINATION AXIAL/BACKWARD CURVED WHEEL
AD	ACCESS DOOR
AF	AFTER FILTER
AFF	ABOVE FINISHED FLOOR
AFM	AIR FLOW MEASURING DEVICE
AFW	AIR FOIL WHEEL (FAN)
AHU	AIR HANDLING UNIT
AI	ANALOG INPUT
AO	ANALOG OUTPUT
APD	AIR PRESSURE DROP
AS	AIR SEPARATOR
ATC	AUTOMATIC TEMPERATURE CONTROLS
BG	BOTTOM GRILLE (WALL TYPE)
BHP	BRAKE HORSEPOWER
BIW	BACKWARD INCLINED WHEEL (FAN)
BR	BOTTOM REGISTER (WALL TYPE)
BTU	BRITISH THERMAL UNIT
BTUH	BRITISH THERMAL UNIT PER HOUR
C	CONVERTOR
CC	COOLING COIL
CCF	CABINET CEILING FAN
CCU	CENTRIFUGAL OR HELICAL ROTARY SCREW CHILLER UNIT
CD	CEILING DIFFUSER
CF	CENTRIFUGAL FAN
CFM	CUBIC FEET PER MINUTE
CG	CEILING GRILLE
CHR	CHILLED WATER RETURN
CHS	CHILLED WATER SUPPLY
CO	CLEAN OUT
CONV	CONVECTOR
COTR	CONTRACTING OFFICER'S TECHNICAL REPRESENTATIVE
CP	CONDENSATE PUMP
CR	CEILING REGISTER
CUH	CABINET UNIT HEATER
CW	COLD WATER (POTABLE)
D	AUTOMATIC CONTROL DAMPER
Db	DRY BULB TEMPERATURE, DEG. F
DB	DECIBELS
DDC	DIRECT DIGITAL CONTROLS
DEG	DEGREE
DI	DIGITAL INPUT
DIA	DIAMETER
DO	DIGITAL OUTPUT
DPS	DIFFERENTIAL PRESSURE SENSOR
DWDI	DOUBLE WIDTH DOUBLE INLET (FAN)
DX	DIRECT EXPANSION
E.A.	EXHAUST AIR
EAT	ENTERING AIR TEMPERATURE
ECC	ENGINEERING CONTROL CENTER
E.C.L.	ETCHED CLEAR LACQUER
EER	ENERGY EFFICIENCY RATIO
EF	EXHAUST FAN
ENT	ENTERING
ESP	EXTERNAL STATIC PRESSURE
ET	EXPANSION TANK
EWT	ENTERING WATER TEMPERATURE
EX.	EXISTING
F	FAHRENHEIT
FC	FLEXIBLE CONNECTION
FCU	FAN COIL UNIT
FCW	FOWARD CURVED WHEEL (FAN)
FD	FLOOR DRAIN
F&T	FLOAT AND THERMOSTATIC

ABBREVIATIONS

FLR.	FLOOR
FPM	FEET PER MINUTE
FT	FEET
GPM	GALLONS PER MINUTE
HC	HEATING COIL
HD	HEAD
HP	HORSEPOWER
HPR	HIGH PRESSURE STEAM CONDENSATE RETURN
HPS	HIGH PRESSURE STEAM SUPPLY (60 PSIG & ABOVE)
HWR	HEATING HOT WATER RETURN
HWS	HEATING HOT WATER SUPPLY
ICF	IN-LINE CENTRIFUGAL FAN
IN	INCHES
IN WC	INCHES WATER COLUMN
IN WG	INCHES WATER GAUGE
LAT	LEAVING AIR TEMPERATURE
LBS/HR	POUNDS PER HOUR
LPR	LOW PRESSURE STEAM CONDENSATE RETURN
LPS	LOW PRESSURE STEAM SUPPLY (15 PSIG & BELOW)
LVG	LEAVING
LWT	LEAVING WATER TEMPERATURE
MAX	MAXIMUM
MB	MIXING BOX
MBH	1000 BTUH
MCA	MINIMUM BRANCH CIRCUIT AMPACITY
MERV	MINIMUM EFFICIENCY REPORTING VALUE
MIN	MINIMUM
MPR	MEDIUM PRESSURE STEAM CONDENSATE RETURN
MPS	MEDIUM PRESSURE STEAM SUPPLY (16 PSIG THRU 59 PSIG)
MV	MANUAL AIR VENT
NC	NOISE CRITERIA
N.C.	NORMALLY CLOSED
N.O.	NORMALLY OPEN
NOM	NOMINAL
O.A.	OUTSIDE AIR
OD	OUTSIDE DIAMETER
P	PUMP
PC	PUMPED CONDENSATE
PD	PRESSURE DROP (FEET OF WATER)
PEF	PROPELLER TYPE EXHAUST FAN
PF	PRE-FILTER
PH	PREHEAT COIL
PRV	PRESSURE REDUCING VALVE
PUH	PROPELLER UNIT HEATER
R.A.	RETURN AIR
RF	RETURN FAN
Rh	RELATIVE HUMIDITY
RPM	REVOLUTIONS PER MINUTE
RV	POWER TYPE ROOF VENTILATOR
S.A.	SUPPLY AIR
SAT	SUPPLY AIR TEMPERATURE
SD	SMOKE DETECTOR
SDR	SMOKE DAMPER (RETURN)
SDS	SMOKE DAMPER (SUPPLY)
SF	SUPPLY FAN
SH	STEAM HUMIDIFIER
S.P.	STATIC PRESSURE (INCHES OF WATER)
SP. GR.	SPECIFIC GRAVITY
SPRV	STEAM PRESSURE REDUCING VALVE
SPS	STATIC PRESSURE SENSOR
SWSI	SINGLE WIDTH SINGLE INLET (FAN)
TG	TOP GRILLE (WALL TYPE)
TG	TRANSFER GRILLE
TR	TOP REGISTER (WALL TYPE)
TSTAT	THERMOSTAT
TSP	TOTAL STATIC PRESSURE
U/C	DOOR UNDERCUT BY GENERAL CONTRACTOR
UH	UNIT HEATER
USF	UTILITY SET FAN
V	VALVE
VAV	VARIABLE AIR VOLUME
VD	VOLUME DAMPER
VFD	VARIABLE FREQUENCY DRIVE
W	WATTS
Wb	WET BULB TEMPERATURE, DEG. F
W.B.E.	WHITE BAKED ENAMEL
WF	WATER FILTER
WG	WATER GAUGE
WV	POWER TYPE WALL VENTILATOR

Project Seeking LEED Certification.
See Specification Section 01 81 13.

GENERAL NOTES

1. ALL PIPING AND DUCTS IN FINISHED ROOMS OR SPACES SHALL BE CONCEALED IN A FURRED CHASE OR ABOVE THE SUSPENDED CEILING.
2. THE FIRST FIGURE OF DUCT SIZE INDICATES DIMENSION OF FACE SHOWN OR INDICATED. DUCT SIZES ARE NET INSIDE DIMENSIONS.
3. ACCESS PANELS IN NON ACCESSIBLE SUSPENDED CEILINGS ARE REQUIRED FOR ALL VALVES, TRAPS, DAMPERS, CLEANOUTS, CONTROLS, ETC. ACCESS PANELS SHALL BE FURNISHED AND INSTALLED UNDER THE ARCHITECTURAL SPECIFICATIONS.
4. TOTAL STATIC PRESSURE NOTED IN THE SCHEDULES INCLUDES DUCT SYSTEM, TERMINAL UNITS, FILTERS, COILS, ETC.
5. FOR TYPICAL STEAM, WATER AND REFRIGERANT PIPING CONNECTIONS TO EQUIPMENT, SEE STANDARD DETAILS AND PIPING SCHEMATICS.
6. DIFFUSER, REGISTER AND GRILLE SIZES SHOWN ON FLOOR PLANS ARE NECK SIZES.
7. WATER PIPE CONNECTIONS TO AIR HEATING AND COOLING COILS SHALL BE MADE TO PROVIDE COUNTER FLOW BETWEEN WATER AND AIR.
8. WALL TYPE EXHAUST REGISTERS NOTED AS "BR" ON DRAWINGS ARE TO BE INSTALLED WITH BOTTOM OF REGISTERS SEVEN INCHES ABOVE FINISHED FLOOR.
9. REFER TO ARCHITECTURAL REFLECTED CEILING PLANS FOR EXACT LOCATION OF CEILING DIFFUSERS, REGISTERS, AND GRILLES.
10. WHERE DUCTS OR PIPES ARE REMOVED THRU WALL/FLOOR/ROOF THAT IS TO REMAIN, PATCH WALL/FLOOR/ROOF OPENING TO MATCH EXISTING WHERE OPENING IS NOT RE-USED.
11. ALL PRESSURES LISTED ARE GAGE PRESSURE UNLESS OTHERWISE NOTED.
12. ALL CUTTING AND PATCHING REQUIRED FOR THE HVAC WORK SHALL BE INCLUDED IN THE HVAC CONTRACT. REFINISH ANY SURFACE DISTURBED UNDER THIS WORK TO MATCH EXISTING.
13. IN GENERAL, KEEP DUCT AND PIPING MAINS NEXT TO UNDERSIDE OF STRUCTURE.
14. ANNULAR SPACE OF ALL PIPE, CONDUIT, DUCT & OTHER SIMILAR PENETRATIONS OF FIRE RATED ASSEMBLIES SHALL BE FIRESTOPPED. IN ADDITION, PENETRATIONS THROUGH 0-HOUR RATED WALLS & FLOORS SHALL BE FIRESTOPPED TO RETARD PASSAGE OF FIRE & SMOKE.
15. UPON THE DISCOVERY OF ANY ASBESTOS MATERIAL, STOP WORK IMMEDIATELY AND REPORT IT TO THE COTR. THE COTR WILL NOTIFY CONTRACTOR WHEN WORK IS SAFE TO PROCEED.
16. ANY REMOVED EQUIPMENT SHALL BE TURNED OVER TO THE VA. ITEMS NOT DESIRED BY THE VA SHALL BE REMOVED FROM THE PREMISES AND DISPOSED OF PROPERLY BY THE CONTRACTOR.
17. REFER TO SPECIFICATIONS FOR ADDITIONAL INFORMATION.
18. THE CONTRACT DRAWINGS ARE NOT INTENDED TO SHOW EVERY VERTICAL OR HORIZONTAL OFFSET WHICH MAY BE NECESSARY TO COMPLETE THE SYSTEMS. COORDINATE WORK IN ADVANCE WITH ALL OTHER TRADES AND REPORT IMMEDIATELY AND DIFFICULTIES WHICH CAN BE ANTICIPATED.
19. FIELD VERIFY EXISTING CONDITIONS, INCLUDING DUCT, PIPE AND EQUIPMENT SIZES, SERVICES AND LOCATIONS PRIOR TO PERFORMING WORK.
20. HEPA FILTERED EXHAUST IS REQUIRED TO MAINTAIN A MINIMUM OF 0.01" W.G. NEGATIVE PRESSURE IN CONSTRUCTION AREAS. COORDINATE WITH GENERAL CONTRACTOR AND COTR.
21. ALL ABANDONED EXTRANEOUS PIPING, DUCTWORK, SUPPORTS, CONTROLS, ETC. SHALL BE REMOVED.
22. WHERE CONTROL DEVICES ARE REMOVED, PNEUMATIC LINES SHALL BE REMOVED BACK TO MAIN AND CAPPED, AND CONTROL WIRING AND CONDUIT SHALL BE REMOVED BACK TO SOURCE.
23. ALL ITEMS THAT REQUIRE ACCESS, SUCH AS FOR OPERATING, CLEANING, SERVICING, MAINTENANCE, AND CALIBRATION, SHALL BE EASILY AND SAFELY ACCESSIBLE BY PERSONS STANDING AT FLOOR LEVEL, OR STANDING ON PERMANENT PLATFORMS, WITHOUT THE USE OF PORTABLE LADDERS. EXAMPLES OF THESE ITEMS INCLUDE, BUT ARE NOT LIMITED TO: ALL TYPES OF VALVES, FILTERS AND STRAINER, TRANSMITTERS, CONTROL DEVICES.
24. WHERE ROOFING WORK IS REQUIRED, THE EXISTING ROOFING MEMBRANE AND INSULATION SHALL BE CUT, REMOVED AND RESTORED AS REQUIRED TO ATTAIN A WATERTIGHT CONDITION. THE ROOFING SUB-CONTRACTOR SHALL BE A CERTIFIED INSTALLER FOR SUCH INSTALLATION TO MAINTAIN THE EXISTING WARRANTY ON THE ROOF.
25. ALL EXISTING DUCTWORK, PIPING, EQUIPMENT, CONTROLS, ETC. SHOWN DASHED SHALL BE REMOVED. THE MAJORITY OF WORK TO BE REMOVED IS SHOWN. REMOVE ALL INCIDENTAL ABANDONED DUCTWORK, PIPING, ETC., THAT MAY NOT BE SHOWN BUT IS ASSOCIATED WITH THE REMOVAL WORK.
26. INCLUDE ALL WORK NECESSARY TO ACCOMMODATE PHASING. REFER TO ARCHITECTURAL DRAWINGS AND GENERAL REQUIREMENTS SECTION 01 00 00.
27. REFER TO ARCHITECTURAL FIRE-RATED PARTITION PLAN, SHEETS A102 & A103 FOR LOCATIONS AND FIRE-RATINGS OF NEW AND EXISTING WALL ASSEMBLIES. ALL PENETRATIONS THROUGH FIRE-RATED ASSEMBLIES SHALL BE PROTECTED AND/OR FIRE-STOPPED AS REQUIRED TO MAINTAIN FIRE-RATINGS INDICATED. GC SHALL COORDINATE ALL TRADES TO ENSURE FIRE-RATED PENETRATION REQUIREMENTS AND DETAILS ARE MET.
28. WHERE EXISTING HVAC UTILITIES IN SERVICE WILL BE DISRUPTED DURING THE CONSTRUCTION OF THIS PROJECT, THIS WORK SHALL BE PERFORMED ON WEEKENDS OR WEEK NIGHTS, IF REQUIRED BY THE COTR. DOWNTIME SHALL BE KEPT TO A MINIMUM, AND SHALL BE COORDINATED AND SCHEDULED WELL IN ADVANCE WITH THE COTR.

INDEX OF DRAWINGS

Sheet Number	Sheet Name
H1	LEGEND AND SCHEDULES
H2	SCHEDULES
H3	SCHEDULES AND DETAILS
H4	DETAILS
H5	DETAILS
H6	DETAILS
H7	DETAILS
H8	STEAM SYSTEM SCHEMATIC
H9	HOT AND CHILLED WATER SYSTEM SCHEMATICS
H10	CONTROLS AND AUTOMATION
H11	CONTROLS AND AUTOMATION
H12	CONTROLS AND AUTOMATION
H13	AIR FLOW DIAGRAMS
H14	AIR AND WATER FLOW DIAGRAMS
211-H1	PIPE BASEMENT FLOOR PLAN - REMOVALS
211-H2	PARTIAL BASEMENT FLOOR PLAN - REMOVALS
211-H3	PARTIAL FIRST FLOOR PLAN - REMOVALS
211-H4	PARTIAL SECOND FLOOR PLAN - REMOVALS
211-H5	ENLARGED SERVICE ROOM FLOOR PLAN - REMOVALS AND NEW WORK
211-H6	PIPE BASEMENT FLOOR PLAN - NEW WORK
211-H7	PARTIAL BASEMENT FLOOR PLAN - DUCTWORK
211-H8	PARTIAL BASEMENT FLOOR PLAN - PIPING
211-H9	PARTIAL FIRST FLOOR PLAN - DUCTWORK
211-H10	PARTIAL FIRST FLOOR PLAN - PIPING
211-H11	PARTIAL SECOND FLOOR PLAN - DUCTWORK
211-H12	PARTIAL SECOND FLOOR PLAN - PIPING
211-H13	PARTIAL ATTIC FLOOR PLAN - NEW WORK
211-H14	ATTIC SECTIONS
211-H15	BUILDING SECTIONS

Revisions	Date

CONSULTANTS:

Heapy Engineering
Mechanical Electrical Commissioning Technology
Nationally Recognized Leader in Sustainability / LEED
1400 W Dorothy Lane, Dayton OH 45409-1310
Ph: 937-224-0861 Fax: 937-224-5777 www.heapy.com
PROJECT NO. 2010-04024 FIRM LICENSE NO. 01528

STATE OF OHIO — JOHN A. BLACK 49341 — REGISTERED PROFESSIONAL ENGINEER

ARCHITECT/ENGINEERS:

JOHN POE ARCHITECTS
116 EAST THIRD STREET
DAYTON, OHIO
45402-2130
937 461 3290 PHONE
937 461 0260 FAX
jpa@johnpoe.com

Drawing Title: LEGEND AND SCHEDULES

Approved: Project Director

Project Title: RENOVATE CLC BUILDING 211 WEST

Location: Chillicothe, Ohio

Date: 09/06/2013 | Checked: DLE | Drawn: JAC

Project No.: VA Project No. 538-107; JPA Project No. 11001.00

Building Number: 211

Drawing Number: H1

Dwg. 74 of 132

Office of Construction and Facilities Management
Department of Veterans Affairs

9/6/2013 1:30:40 PM

FULLY SPRINKLERED

HOT WATER UNIT HEATER SHEDULE

UNIT NO.	LOCATION	TYPE UNIT	CFM	MIN. MBH	ENT. TEMP. °F AIR	ENT. TEMP. °F WATER	GPM	MAX. LOSS THRU COIL FT. WATER	RUNOUT SIZE	AUTO VALVE TYPE	AUTO VALVE CV	APPROX. CABINET DIMS. HEIGHT	APPROX. CABINET DIMS. WIDTH	APPROX. CABINET DIMS. DEPTH	MOTOR HP (W)	VOLT.-PHASE	NOTES
211-CUH6	SEE PLANS	FLOOR SET VERTICAL CABINET	330	22.5	70	180	1.5	3	0.75"	3-WAY	0.6	28"	38"	10"	(95)	115-1	1,2,3,4,5
211-CUH7	SEE PLANS	FLOOR SET VERTICAL CABINET	330	22.5	70	180	1.5	3	0.75"	3-WAY	0.6	28"	38"	10"	(95)	115-1	1,2,3,4,5
211-CUH8	SEE PLANS	HORIZONTAL CONCEALED DUCTED	400	26.0	70	180	1.7	3.5	0.75"	3-WAY	0.8	34"	28"	10"	(170)	115-1	1,2,4,6
211-PUH6	SEE PLANS	PROPELLER	420	12.0	60	180	0.8	2.5	0.75"	3-WAY	0.4	16"	18"	9-1/2"	(16)	115-1	1,2,4,7

NOTES:

1 VERIFY/COORDINATE CABINET DIMENSIONS, MOUNTING & RECESS REQUIREMENTS PRIOR TO ORDERING.

2 REFER TO FLOOR PLANS FOR QUANTITY OF UNITS.

3 UNIT SHALL HAVE SLOPING TOP, BOTTOM INLET, AND STAMPED TOP OUTLET GRILLES.

4 REFER TO PIPING DETAILS ON SHEET H6 FOR PIPING COMPONENTS.

5 PROVIDE EXTENDED END POCKET OPTION IF REQUIRED FOR INSTALLATION OF PIPING COMPONENTS AS DETAILED ON SHEET H6.

6 UNIT HAS CONNECTED SUPPLY & RETURN AIR DUCTWORK AND SHALL INCLUDE HIGH STATIC MOTOR OPTION.

7 UNIT IS PART OF BASEMENT DEDUCT ALTERNATE - TO BE PROVIDED ONLY IF DEDUCT ALTERNATE IS TAKEN.

HOT WATER CONVECTOR SHEDULE

UNIT NO.	LOCATION	TYPE UNIT	MOUNTING	HTG. MBH	ENT. TEMP. °F AIR	ENT. TEMP. °F WATER	GPM	RUNOUT SIZE	AUTO VALVE TYPE	AUTO VALVE CV	APPROX. CABINET DIMS. LENGTH	APPROX. CABINET DIMS. HEIGHT	APPROX. CABINET DIMS. DEPTH	NOTES
211-CONV2	SEE PLANS	CONTINUOUS CABINET HYDRONIC WALL FIN	WALL HUNG	17.0	65	180	1.2	0.75"	3-WAY	0.6	21'-0"	16"	4"	1,2

NOTES:

1 VERIFY/COORDINATE CABINET DIMENSIONS, MOUNTING & RECESS REQUIREMENTS PRIOR TO ORDERING.

2 SLOPING TOP.

AIR FLOW MEASURING DEVICE SCHEDULE

UNIT NO.	LOCATION	DUCT SIZE WxH	FAN SIZE & TYPE	CFM MIN.	CFM MAX.	S.P. DROP	SYSTEM
211-AFM6A	211-AHU6 SUPPLY DUCT	30"X30"	N/A	2,065	6,800	0.02"	211-AHU6
211-AFM6B	211-AHU6 RETURN DUCT	20"X20"	N/A	920	2,720	0.02"	211-AHU6
211-AFM6C	211-AHU6 RETURN DUCT	20"X20"	N/A	920	2,625	0.02"	211-AHU6
211-AFM6D	211-AHU6 OUTSIDE AIR DUCT	26"X20"	N/A	1,190	6,800	0.02"	211-AHU6
211-AFM7A	211-AHU7 SUPPLY DUCT	24"X32"	N/A	1,590	7,300	0.02"	211-AHU7
211-AFM7B	211-AHU7 RETURN DUCT	32"X24"	N/A	1,330	7,300	0.02"	211-AHU7
211-AFM7C	211-AHU7 OUTSIDE AIR DUCT	28"X20"	N/A	1,275	7,300	0.02"	211-AHU7
211-AFM8A	211-AHU8 SUPPLY DUCT	54"X34"	N/A	4,155	20,700	0.02"	211-AHU8
211-AFM8B	211-AHU8 RETURN DUCT	40"X20"	N/A	1,785	6,230	0.02"	211-AHU8
211-AFM8C	211-AHU8 RETURN DUCT	30"X34"	N/A	2,340	10,335	0.02"	211-AHU8
211-AFM8D	211-AHU8 OUTSIDE AIR DUCT	54"X30"	N/A	3,640	20,700	0.02"	211-AHU8

VORTEX METER SCHEDULE

MARK	LOCATION	SYSTEM AND/OR SERVICE	MAX. LOAD LB/HR	OUTPUT SIGNAL	LINE PRESSURE PSIG	FLOW RANGE LB/HR	MIN ACCURACY [%]	METER SIZE IN.	METER HEAD MOUNTING LOCATION	EXISTING PIPE SIZE	MAX DIFF PRESS PSIG	NOTES
211-SSM1	PIPE BASEMENT	STEAM SUPPLY	9,600	4-20mA AND PULSE	65	352-9,020	1.5	3"	UNIT	5"	3.0	1,2

NOTES:

1 CONTRACTOR SHALL FIELD VERIFY EXISTING PIPE SIZES, CONNECTION TYPES (FLANGED, THREADED, ETC.), AND PIPING MATERIALS (STEEL, COPPER, ETC.), PRIOR TO FINALIZING SHOP DRAWINGS.

2 CONTRACTOR SHALL COORDINATE POWER & SIGNAL REQUIREMENTS WITH METER MANUFACTURER.

ELECTROMAGNETIC METER SCHEDULE

MARK	LOCATION	SYSTEM AND/OR SERVICE	FLUID TEMP °F	ACCURATE FLOW RANGE FPS	MIN ACCURACY [%]	OUTPUT SIGNAL	EXISTING PIPE SIZE	METER HEAD MOUNTING LOCATION	PIPE MATERIAL	MOUNTING STYLE	NOTES
211-CHM1	PIPE BASEMENT	CHILLED WATER	40	3.3-30	±0.4	4-20mA AND PULSE	6"	UNIT	SCH. 40 STEEL	FULL BORE	1,2,3
211-DWM1	SERVICE ROOM	DOMESTIC WATER	55	3.3-30	±0.4	4-20mA AND PULSE	4"	UNIT	SCH. 40 STEEL	FULL BORE	1,2,3

NOTES:

1 METERS SHALL BE FULL SIZE OF EXISTING PIPE.

2 CONTRACTOR SHALL FIELD VERIFY EXISTING PIPE SIZES, CONNECTION TYPES, (FLANGED, THREADED, ETC.) AND PIPING MATERIALS (STEEL, COPPER, ETC.), PRIOR TO FINALIZING SHOP DRAWINGS.

3 CONTRACTOR SHALL COORDINATE POWER & SIGNAL REQUIREMENTS WITH METER MANUFACTURER.

AIR DISTRIBUTION DEVICES

SYMBOL	DESCRIPTION	TYPE MOUNTING LAY-IN	TYPE MOUNTING SURFACE	MATERIAL STEEL	MATERIAL ALUM.	FINISH E.C.L.	FINISH W.B.E.	ACCESSORIES	SEE NOTE
CD1	STANDARD SQ. PLAQUE CEILING DIFFUSER ROUND NECK	◦		◦			◦		
CD2	STANDARD SQ. PLAQUE CEILING DIFFUSER ROUND NECK		◦	◦			◦		
CD3	LINEAR PLENUM SLOT ADJUSTABLE BLADE DIFFUSER	◦		◦			◦		1
CG1	EGGCRATE CEILING GRILLE	◦			◦		◦		
CG2	EGGCRATE CEILING GRILLE		◦		◦		◦		
CR1	EGGCRATE CEILING REGISTER	◦			◦		◦	OPPOSED BLADE DAMPER	
TR1	FIXED BLADE RETURN/ EXHAUST REGISTER		◦	◦			◦	OPPOSED BLADE DAMPER	
TR2	ADJUSTABLE BLADE SUPPLY REGISTER		◦	◦			◦	OPPOSED BLADE DAMPER	

NOTES:
1 PROVIDE 48" LONG DEVICE WITH 1 - 1" SLOT

STEAM TO STEAM HUMIDIFIER SCHEDULE

HUMID. NO.	SYSTEM	CFM	ABSORP. DISTANCE (MAX.)	ENT. AIR °F Db	ENT. AIR °F Wb	LVG. AIR °F Db	LVG. AIR °F Wb	STEAM PSIG ENT. ON-OFF VALVE	STEAM PSIG ENT. CONTROL VALVE	ON-OFF & CONTROL VALVE LBS/HR	TRAP LBS/HR
211-SH6	211-AHU6	6,800	36"	54.5	-	54.5	-	15	10	40	80
211-SH7	211-AHU7	7,300	36"	54.5	-	54.5	-	15	10	38	76
211-SH8	211-AHU8	20,600	36"	54.5	-	54.5	-	15	10	114	228

DUCT PRESSURE CLASS & LEAKAGE TABLE

SYSTEM	DUCT INVOLVED	POSITIVE (P) OR NEGATIVE (N) PRESSURE	SMACNA CONST. CLASS W.G.	SMACNA SEAL CLASS	SMACNA LEAKAGE CLASS RECTANGULAR DUCT	SMACNA LEAKAGE CLASS ROUND DUCT
ALL SYSTEMS	ALL DUCTWORK EXCEPT AS LISTED BELOW.	P/N	± 2"	A	6	3
	SUPPLY AIR DUCTS FROM OUTLET OF AH-UNIT TO INLET OF AIR TERMINAL UNITS.	P	4"	A	6	3
	SUPPLY AIR DUCTS FROM OUTLET OF AIR TERMINAL UNITS TO SUPPLY AIR DEVICES	P	1"	A	6	3
	RETURN AIR DUCTS FROM CEILING REGISTERS TO INLET OF AH-UNIT	N	-2"	A	6	3
	GENERAL EXHAUST DUCTS	N	-2"	A	6	3
	OUTSIDE AIR DUCTS	N	-2"	A	6	3
	RELIEF AIR DUCTS	N	2"	A	6	3

HVAC DESIGN DATA

OUTDOOR DESIGN TEMPERATURES — 95 DEG. F Db SUMMER; 78 DEG. F Wb SUMMER; 0 DEG. F Db WINTER — DESIGN ALTITUDE: 638 FT.

INDOOR AREA DESIGN CONDITIONS	SUMMER Db (°F)	SUMMER % HUMIDITY	WINTER Db (°F)	WINTER % HUMIDITY
BATHROOMS & TOILET ROOMS	75	-	68	30
PATIENT ROOMS	72	50	75	30
WEST WING ATTIC	80	50	50	(NOTE 2)
BASEMENT SHELL SPACES	(NOTE 1)	-	50	(NOTE 2)
ALL OTHER AREAS	72	50	75	30
UNOCCUPIED MODE (3)	80	-	60	-

NOTES:
1 COOLING NOT INCLUDED FOR BASEMENT SHELL SPACES.
2 HUMIDITY CONTROL NOT INCLUDED FOR ATTIC AND BASEMENT SHELL SPACES.
3 REFERS TO OCCUPANCY STATUS FOR CONTROL OF AIR TERMINAL UNITS. REFER TO AIR TERMINAL UNIT SCHEDULE ON SHEET H3 AND CONTROL SEQUENCES ON SHEET H10.

AIR FILTER SCHEDULE

FILTER NO.	CFM	SYSTEM	MERV RATING	EFFICIENCY	MAX. S.P. DROP (1) INITIAL	MAX. S.P. DROP (1) FINAL	HOUSING TYPE	MAX. FACE VELOCITY	SEE NOTE
211-PF6	6,800	211-AHU6	8	35%	0.33"	0.66"	SIDE ACCESS HOUSING	500	1,2
211-AF6	6,800	211-AHU6	13	85%	0.34"	0.68"	SIDE ACCESS HOUSING	500	1,2
211-PF7	7,300	211-AHU7	8	35%	0.33"	0.66"	SIDE ACCESS HOUSING	500	1,2
211-AF7	7,300	211-AHU7	13	85%	0.34"	0.68"	SIDE ACCESS HOUSING	500	1,2
211-PF8	20,700	211-AHU8	8	35%	0.33"	0.66"	SIDE ACCESS HOUSING	500	1,2
211-AF8	20,700	211-AHU8	13	85%	0.34"	0.68"	SIDE ACCESS HOUSING	500	1,2

NOTES:
1 STATIC PRESSURE REQUIREMENTS BASED ON 500 FPM FACE VELOCITY. FINAL PRESSURE DROPS BASED ON VA'S RECOMMENDED CHANGE OVER PRESSURE DROP.
2 FILTER HOUSING TO BE PART OF AIR HANDLING UNIT ASSEMBLY.

AIR HANDLING UNIT SCHEDULE

UNIT NO.	LOCATION	AREA SERVED	FAN NO.	CFM SUPPLY	CFM O.A.	EXTERNAL S.P. (1) IN.	SPECIFIED INTERNAL LOSSES (2) IN.	UNSPECIFIED INTERNAL LOSSES (3) IN.	FAN TOTAL S.P. (4) IN.	TYPE OF SYSTEM (5)
211-AHU6	ATTIC OF WEST WING	CENTRAL/SOUTH WEST WING	211-RF6 / 211-SF6	6,800	1,945	1.5 / 1.0	0 / 2.1	0.2 / 0.5	1.2 / 4.1	VAV
211-AHU7	ATTIC OF WEST WING	CENTRAL WEST WING	211-RF7 / 211-SF7	7,300	1,520	1.5 / 2.5	0 / 2.23	0.2 / 0.47	1.7 / 5.2	VAV
211-AHU8	ATTIC OF WEST WING	NORTH WEST WING	211-RF8 / 211-SF8	20,700	5,585 (6)	2.5 / 3.5	0 / 1.94	0.1 / 0.56	2.6 / 6.0	VAV

NOTES:
1 EXTERNAL STATIC PRESSURE REQUIRED AT DUCT CONNECTIONS TO INLET / OUTLET OF AHU. MEASUREMENTS SHALL BE TAKEN WITHIN 3 FT. OF INLET AND OUTLET AT A POINT OF MAXIMUM ACCURACY.
2 TOTAL OF MAXIMUM PRESSURE DROPS OF COMPONENTS WHICH ARE SPECIFIED SEPARATELY, I.E. PREFILTERS, AFTER FILTERS, HEATING AND COOLING COILS, DIFFUSER PLATE AND SOUND ATTENUATOR. AIR FILTER PRESSURE DROP SHALL BE SELECTED AT MID-LIFE.
3 INTERNAL LOSS ALLOWANCE SHALL INCLUDE LOSSES DUE TO ENTRANCE AND EXIT OF AHU, MIXING BOXES, DIFFUSER SECTION (OTHER THAN DIFFUSER PLATE) INCLUDING LOSSES DUE TO FAILURE TO PROPERLY CONVERT FAN DISCHARGE VELOCITY PRESSURE TO STATIC PRESSURE, FAN INLET CONDITIONS, CASINGS, HUMIDIFERS, DAMPERS, ETC.
4 TOTAL FAN S.P = EXTERNAL STATIC PRESSURE + SPECIFIED INTERNAL LOSSES + UNSPECIFIED INTERNAL LOSSES. MANUFACTURER SHALL PROVIDE SUBMITTAL SHOWING ACTUAL LOSSES OF ALL EQUIPMENT PROVIDED. REFER TO FAN SCHEDULE FOR ADDITIONAL FAN SELECTION INFORMATION.
5 REFER TO AIR HANDLING UNIT DETAIL ON SHEET H7 FOR AH-UNIT LAYOUT AND COMPONENTS.
6 UNDER BASE BID, BALANCE 211-AHU8 OUTSIDE AIR VOLUME TO 5,585 CFM. IF BASEMENT DEDUCT ALTERNATE IS TAKEN, BALANCE 211-AHU8 OUTSIDE AIR VOLUME TO 4,890 CFM

FAN SCHEDULE

FAN NO.	LOCATION	FAN CFM	FAN S.P.	FAN TYPE	DESCRIPTION	WHEEL TYPE	WHEEL MIN. DIA.	MAX. RPM	DRIVE	MOTOR MAX. BHP	MOTOR NOM. HP (2)	MOTOR VOLT.-PHASE	MOTOR VFD	SEE NOTE
211-SF6	211-AHU6	6,800	4.1"	CF	DWDI TOP HORIZONTAL	AFW	18"	2,150	BELT	9.0	10	208-3	YES	1,3
211-RF6	211-AHU6	5,345	1.2"	CF	DWDI TOP HORIZONTAL	AFW	20"	1,090	BELT	2.7	3	208-3	YES	1,3
211-SF7	211-AHU7	7,300	5.2"	CF	DWDI TOP HORIZONTAL	AFW	20"	1,860	BELT	13.5	15	208-3	YES	1,3
211-RF7	211-AHU7	7,300	1.7"	CF	DWDI TOP HORIZONTAL	AFW	20"	1,250	BELT	4.5	5	208-3	YES	1,3
211-SF8	211-AHU8	20,700	6.0"	CF	DWDI TOP HORIZONTAL	AFW	28"	1,440	BELT	36.0	40	208-3	YES	1,3
211-RF8	211-AHU8	16,915	2.6"	CF	DWDI TOP HORIZONTAL	AFW	32"	840	BELT	13.5	15	208-3	YES	1,3
211-EF9	WEST WING ATTIC	1,635	0.8	ICF	TUBULAR IN-LINE CENTRIFUGAL	BIW	13"	1,750	BELT	0.675	3/4	208-3	NO	-
211-EF10	WEST WING ATTIC	4,570	1.1	ICF	TUBULAR IN-LINE CENTRIFUGAL	BIW	22"	1,070	BELT	1.8	2	208-3	NO	4
211-EF11	BSMT. LOCKER RM.	260	0.25	ICF	SQUARE IN-LINE CENTRIFUGAL	BIW	8"	1,230	DIRECT	0.045	1/20	115-1	NO	-
211-EF12	BSMT. HAC CLOSET	75	0.25	CCF	CABINET CEILING FAN	FC	-	-	DIRECT	-	1/15	115-1	NO	5

NOTES :
1 SCHEDULED MAXIMUM BHP IS FOR SCHEDULED SP PLUS TEN PERCENT. IF UNIT COIL PRESSURE DROPS SUBMITTED ARE LESS THAN SCHEDULED, THEN THE SP REQUIREMENT MAY BE REDUCED ACCORDINGLY. MAXIMUM BHP MAY BE BASED ON THE REVISED SP PLUS TEN PERCENT.
2 MOTORS 1 HP AND ABOVE SHALL BE NEMA PREMIUM EFFICIENT TYPE.
3 REFER TO ELECTRICAL DRAWINGS FOR VARIABLE SPEED DRIVE ASSOCIATED WITH THIS FAN.
4 BALANCE EXHAUST FAN 211-EF10 TO 4,570 CFM UNDER BASE BID, AND TO 4,130 CFM IF BASEMENT DEDUCT ALTERNATE IS TAKEN.
5 UNIT IS PART OF BASEMENT DEDUCT ALTERNATE - TO BE REMOVED FROM BID IF DEDUCT ALTERNATE IS TAKEN.

HOT WATER HEATING COIL SCHEDULE

COIL NO.	SYSTEM	CFM	MAX. FACE VEL FPM.	MAX. S.P. LOSS	TEMP. AIR °F ENT.	TEMP. AIR °F LVG.	CIRCULATING FLUID FLUID	CIRCULATING FLUID GPM	CIRCULATING FLUID TEMP. IN °F	CIRCULATING FLUID TEMP. OUT °F	MAX. LOSS FT. FLUID	AUTO VALVE TYPE	AUTO VALVE CV	MIN. MBH
211-PH6	211-AHU6	6,800	500	0.1"	47.3	65.0	HOT WATER	8.7	180	150	0.2	2-WAY	4.2	130.5
211-PH7	211-AHU7	7,300	500	0.12"	53.5	65.0	HOT WATER	6.1	180	150	0.5	2-WAY	3.0	91.5
211-PH8	211-AHU8	20,700	500	0.1"	49.4	65.0	HOT WATER	23.4	180	150	0.5	2-WAY	11.3	349.6

CHILLED WATER COOLING COIL SCHEDULE

COIL NO.	SYSTEM	CFM	MAX. FACE VEL FPM.	MAX. S.P. LOSS	ENT. AIR °F Db	ENT. AIR °F Wb	LVG. AIR °F Db	LVG. AIR °F Wb	CIRCULATING FLUID FLUID	CIRCULATING FLUID GPM	CIRCULATING FLUID TEMP. IN °F	CIRCULATING FLUID TEMP. OUT °F	MAX. LOSS FT.	AUTO VALVE TYPE	AUTO VALVE CV	MINIMUM MBH TOTAL (1)	MINIMUM MBH SENS. (1)
211-CC6	211-AHU6	6,800	500	0.95	80.1	68.0	50.4	50.3	CHILLED WATER	51.6	45	59	7.7	2-WAY	24.8	222.9	362.2
211-CC7	211-AHU7	7,300	500	1.1	78.6	66.8	50.7	50.6	CHILLED WATER	50.2	45	59	7.4	2-WAY	24.2	351.9	224.5
211-CC8	211-AHU8	20,700	500	0.83	79.9	67.8	50.7	50.6	CHILLED WATER	152.7	45	59	7.3	2-WAY	73.4	1072.0	667.0

NOTES:
1 COIL CAPACITY BASED ON STANDARD AIR AT 0 FT. ALTITUDE. COIL SHALL BE MINIMUM 6 ROWS DEEP.

CONVERTER SCHEDULE

CONVERTER NO.	LOCATION	CIRCULATING FLUID FLUID	CIRCULATING FLUID GPM	CIRCULATING FLUID TEMP IN °F	CIRCULATING FLUID TEMP OUT °F	CIRCULATING FLUID MAX. LOSS FT. FLUID	STEAM PSIG ENTERING CONTROL VALVE	STEAM PSIG ENTERING CONVERTER	MINIMUM HEATING SURFACE	HEATING CAPACITY MBH	CONTROL VALVE LBS/HR	TRAP LBS/HR	NOTES
211-C3	SERVICE ROOM	WATER	177	150	180	2.3	30	15	58 S.F.	2600	2797	5594	1,2,3

NOTES:

1 CONVERTER SIZED TO HANDLE 50 PERCENT OF THE TOTAL BUILDING LOAD.
2 CONVERTER SHALL BE SIZED WITH .001 FOULING FACTOR.
3 APPROXIMATE SIZE: 1.2" DIA X 36" LONG.

HVAC PUMP SCHEDULE

PUMP NO.	LOCATION	SYSTEM	CIRCULATING FLUID FLUID	CIRCULATING FLUID GPM	CIRCULATING FLUID PUMP HEAD FT. FLUID	CIRCULATING FLUID TEMP °F	CIRCULATING FLUID SP. GR.	% EFF.	TYPE	MOTOR NOM. HP	MOTOR VOLT.-PHASE	MOTOR RPM	VFD	NOTES
211-P12	SERVICE ROOM	HEATING HOT WATER	CLEAR WATER	194	65	180	1	63	VERTICAL IN-LINE	7.5	208-3	1750	YES	1,2
211-P13	ATTIC - SERVES 211-PH6	HEATING HOT WATER	CLEAR WATER	8.7	15	180	1	28	HORIZONTAL IN-LINE	1/4	115-1	1750	NO	-

NOTES:
1 MOTOR SHALL BE ENERGY EFFICIENT TYPE.
2 PUMP SHALL BE CAPABLE OF OPERATION DOWN TO 33 GPM MINIMUM FLOW.

Revisions	Date

CONSULTANTS:

Heapy Engineering
Mechanical Electrical Commissioning Technology
Nationally Recognized Leader in Sustainability / LEED
1400 W Dorothy Lane, Dayton OH 45409-1310
Ph: 937-224-0861 Fax: 937-224-5777 www.heapy.com
PROJECT NO. 2010-04024 FIRM LICENSE NO. 01528

STATE OF OHIO — JOHN A. BLACK 49341 — REGISTERED PROFESSIONAL ENGINEER

ARCHITECT/ENGINEERS:

JOHN POE ARCHITECTS
116 EAST THIRD STREET
DAYTON, OHIO
45402-2130
937 461 3290 PHONE
937 461 0260 FAX
jpa@johnpoe.com

Drawing Title: SCHEDULES

Approved: Project Director

Project Title: RENOVATE CLC BUILDING 211 WEST

Location: Chillicothe, Ohio

Date: 09/06/2013 | Checked: JAC | Drawn: TEG

Project No. VA Project No. 538-107 JPA Project No. 11001.00

Building Number: 211

Drawing Number: H2

Dwg. 75 of 132

Office of Construction and Facilities Management
Department of Veterans Affairs

9/6/2013 1:30:41 PM

FULLY SPRINKLERED

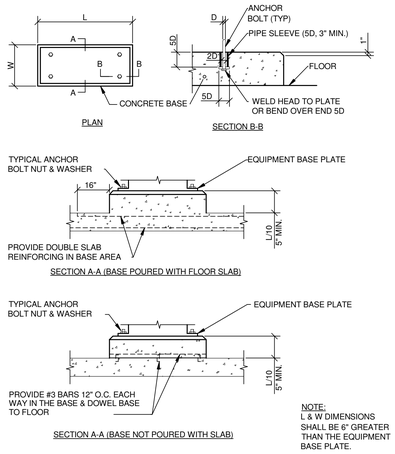

CONCRETE EQUIPMENT BASES

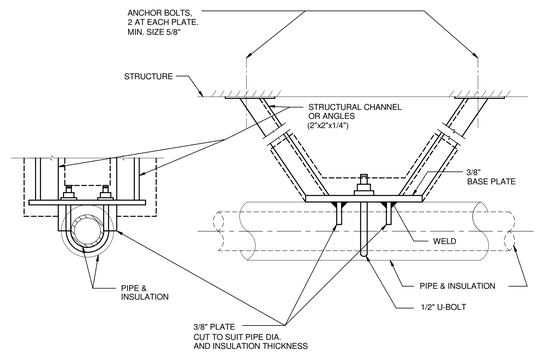

NOTE:

INSULATE ANCHOR AS INDICATED FOR COLD PIPING.

HORIZONTAL PIPE ANCHOR DETAIL

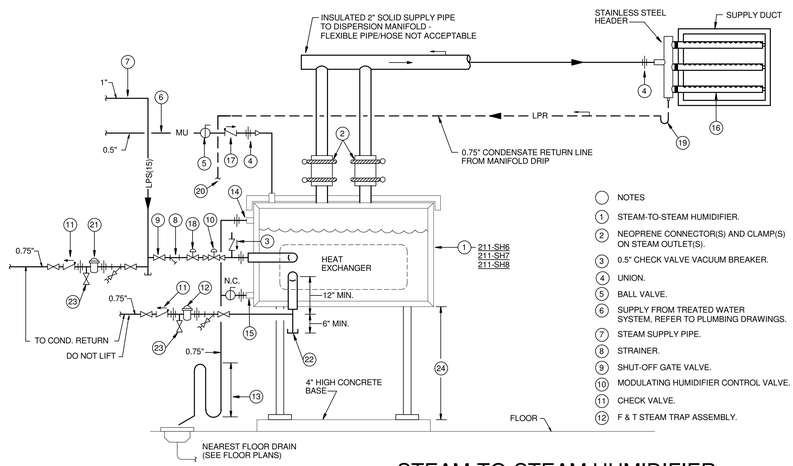

STEAM-TO-STEAM HUMIDIFIER

NOTES

1. STEAM-TO-STEAM HUMIDIFIER.
2. NEOPRENE CONNECTOR(S) AND CLAMP(S) ON STEAM OUTLET(S).
3. 0.5" CHECK VALVE VACUUM BREAKER.
4. UNION.
5. BALL VALVE.
6. SUPPLY FROM TREATED WATER SYSTEM. REFER TO PLUMBING DRAWINGS.
7. STEAM SUPPLY PIPE.
8. STRAINER.
9. SHUT-OFF GATE VALVE.
10. MODULATING HUMIDIFIER CONTROL VALVE.
11. CHECK VALVE.
12. F & T STEAM TRAP ASSEMBLY.
13. TRAP HEIGHT PER MANUFACTURER'S RECOMMENDATIONS.
14. OVERFLOW TAP.
15. AUTOMATIC DRAIN CONNECTION.
16. HUMIDIFIER DISPERSION GRID, TYPE AS RECOMMENDED BY MANUFACTURER.
17. CHECK VALVE.
18. LINE SIZE AUTOMATIC TWO-POSITION ISOLATION VALVE BY ATC. REFER TO SHEET H10 FOR AIR HANDLER UNIT CONTROL SEQUENCES.
19. TRAP - MIN. VERTICAL HEIGHT 5".
20. EXTEND MANIFOLD CONDENSATE TO MAKE-UP INLET ON TANK PROVIDED FOR THIS PURPOSE.
21. INVERTED BUCKET TRAP ASSEMBLY.
22. SCALE POCKET.
23. 0.375" TEST CONNECTION.
24. SUPPORT LEGS, OR MANUFACTURER'S STANDARD ANGLE FRAME SUPPORTS. COORDINATE HEIGHT FOR EACH HUMIDIFIER WITH MANUFACTURER'S TRAP HEIGHT REQUIREMENTS (SEE NOTE 13), CORRESPONDING AHU SUPPLY DUCT HEIGHT, STEAM CONDENSATE TRAP STATIC LEG HEIGHT, STEAM CONDENSATE SLOPING GRAVITY DRAIN PIPE ELEVATIONS, ETC.

AIR TERMINAL UNIT SCHEDULE

UNIT NO.	CFM				APPROX. INLET SIZE (IN.)	DUCT RUNOUT SIZE TO UNIT (IN.) (1)	UNIT MAX. SP AT MAX. CFM (2)	SOUND REQUIREMENTS		HOT WATER HEATING COIL								CONTROL TYPE (6)
	MAX.	WINTER MIN.	SUMMER MIN.	UNOCCUPIED (9)				SP ACROSS UNIT AT MAXIMUM ROOM NC	MAX. ROOM NC (3) (4)	ENT. AIR TEMP. F°	ENT. WATER TEMP. F°	GPM	MAX. WATER P.D. FT. HD.	PIPE RUNOUT SIZE TO COIL	AUTO VALVE Cv	AUTO VALVE TYPE	MIN. MBH (5)	
6-01	315	240	50	-	6	8	0.35"	3.0"	35	55	180	0.7	2	0.75"	0.3	2-WAY	10	V.V.R
6-02	705	480	340	110	9	11	0.35"	3.0"	35	55	180	1.4	2	0.75"	0.7	2-WAY	21	V.V.R
6-03	1640	1050	460	250	14	16	0.35"	3.0"	35	55	180	3.1	2	1.0"	1.5	2-WAY	45	V.V.R
6-04	900	900	900	-	12	14	0.35"	3.0"	35	55	180	2.0	2	0.75"	0.6	2-WAY	29	C.V.R
6-05	275	250	65	45	6	8	0.35"	3.0"	35	55	180	0.8	2	0.75"	0.4	3-WAY	11	V.V.R
6-06	1640	910	455	250	14	16	0.35"	3.0"	35	55	180	2.7	2	1.0"	1.3	2-WAY	39	V.V.R
6-07	910	910	910	-	12	14	0.35"	3.0"	35	55	180	1.9	2	0.75"	0.6	2-WAY	28	C.V.R
6-08	280	240	65	45	6	8	0.35"	3.0"	35	55	180	0.7	2	0.75"	0.3	3-WAY	10	V.V.R
7-01	570	430	85	-	8	10	0.35"	3.0"	35	55	180	1.3	2	0.75"	0.6	2-WAY	19	V.V.R
7-02	310	270	85	50	6	8	0.35"	3.0"	35	55	180	0.8	2	0.75"	0.4	2-WAY	12	V.V.R
7-03	1120	785	540	170	12	14	0.35"	3.0"	35	55	180	2.2	2	0.75"	1.0	2-WAY	32	V.V.R
7-04	590	375	180	90	8	10	0.35"	3.0"	35	55	180	1.1	2	0.75"	0.5	2-WAY	16	V.V.R
7-05	690	430	340	105	9	11	0.35"	3.0"	35	55	180	1.3	2	0.75"	0.6	2-WAY	19	V.V.R
7-06	315	250	90	50	6	8	0.35"	3.0"	35	55	180	0.8	2	0.75"	0.4	2-WAY	11	V.V.R
7-07	1120	780	570	170	12	14	0.35"	3.0"	35	55	180	1.9	2	0.75"	0.9	2-WAY	28	V.V.R
7-08	590	330	180	90	8	10	0.35"	3.0"	35	55	180	1.0	2	0.75"	0.5	2-WAY	14	V.V.R
7-09	450	400	400	-	7	9	0.35"	3.0"	35	55	180	0.8	2	0.75"	0.4	2-WAY	12	V.V.R
7-10	1025	535	175	-	12	14	0.35"	3.0"	35	55	180	1.6	2	0.75"	0.8	2-WAY	23	V.V.R
7-11	205	205	205	-	6	8	0.35"	3.0"	35	55	180	0.5	2	0.75"	0.2	2-WAY	6	C.V.R
8-01A	600	470	90	-	8	10	0.35"	3.0"	35	55	180	1.4	2	0.75"	0.7	2-WAY	20	V.V.R
8-01B	490	355	75	-	7	9	0.35"	3.0"	35	55	180	1.1	2	0.75"	0.5	2-WAY	15	V.V.R
8-01C	270	190	45	-	6	8	0.35"	3.0"	35	55	180	0.6	2	0.75"	0.3	2-WAY	8	V.V.R
8-02	340	305	135	-	6	8	0.35"	3.0"	35	55	180	0.9	2	0.75"	0.4	3-WAY	13	V.V.R
8-03	370	290	130	-	7	9	0.35"	3.0"	35	55	180	0.9	2	0.75"	0.4	2-WAY	13	V.V.R
8-04	300	235	130	-	6	8	0.35"	3.0"	35	55	180	0.7	2	0.75"	0.3	2-WAY	10	V.V.R
8-05	280	240	125	-	6	8	0.35"	3.0"	35	55	180	0.7	2	0.75"	0.3	2-WAY	10	V.V.R
8-06	370	285	165	-	7	9	0.35"	3.0"	35	55	180	0.9	2	0.75"	0.4	2-WAY	12	V.V.R
8-07	330	265	140	-	6	8	0.35"	3.0"	35	55	180	0.8	2	0.75"	0.4	2-WAY	11	V.V.R
8-08	300	235	125	-	6	8	0.35"	3.0"	35	55	180	0.7	2	0.75"	0.3	2-WAY	10	V.V.R
8-09	495	420	220	-	7	9	0.35"	3.0"	35	55	180	1.3	2	0.75"	0.6	2-WAY	18	V.V.R
8-10	365	280	145	-	7	9	0.35"	3.0"	35	55	180	0.8	2	0.75"	0.4	2-WAY	12	V.V.R
8-11	290	250	115	-	6	8	0.35"	3.0"	35	55	180	0.8	2	0.75"	0.4	2-WAY	11	V.V.R
8-12	300	240	130	-	6	8	0.35"	3.0"	35	55	180	0.7	2	0.75"	0.3	2-WAY	10	V.V.R
8-13	430	350	175	-	7	9	0.35"	3.0"	35	55	180	1.0	2	0.75"	0.5	2-WAY	15	V.V.R
8-14	385	300	185	-	7	9	0.35"	3.0"	35	55	180	0.9	2	0.75"	0.4	2-WAY	13	C.V.R
8-15	290	250	110	-	6	8	0.35"	3.0"	35	55	180	0.8	2	0.75"	0.4	2-WAY	11	C.V.R
8-16	710	555	555	-	9	11	0.35"	3.0"	35	55	180	1.5	2	0.75"	0.7	2-WAY	21	V.V.R
8-17	605	605	605	-	9	11	.35"	3.0"	35	55	180	1.6	2	.75"	0.8	2-WAY	23	C.V.R.
8-18	205	205	205	-	6	8	0.35"	3.0"	35	55	180	0.6	2	0.75"	0.3	2-WAY	9	C.V.R
8-19	170	85	35	-	6	8	0.35"	3.0"	35	55	180	0.5	2	0.75"	0.1	2-WAY	2	V.V.R
8-20	345	310	135	-	6	8	0.35"	3.0"	35	55	180	0.9	2	0.75"	0.4	2-WAY	13	V.V.R
8-21	370	250	130	-	7	9	0.35"	3.0"	35	55	180	0.8	2	0.75"	0.4	2-WAY	11	V.V.R
8-22	305	190	130	-	6	8	0.35"	3.0"	35	55	180	0.6	2	0.75"	0.3	2-WAY	8	V.V.R
8-23	280	195	125	-	6	8	0.35"	3.0"	35	55	180	0.6	2	0.75"	0.3	2-WAY	8	V.V.R
8-24	365	235	160	-	7	9	0.35"	3.0"	35	55	180	0.7	2	0.75"	0.3	2-WAY	10	V.V.R
8-25	320	225	135	-	6	8	0.35"	3.0"	35	55	180	0.7	2	0.75"	0.3	2-WAY	10	V.V.R
8-26	300	190	125	-	6	8	0.35"	3.0"	35	55	180	0.6	2	0.75"	0.3	2-WAY	8	V.V.R
8-27	490	355	230	-	7	9	0.35"	3.0"	35	55	180	1.1	2	0.75"	0.5	2-WAY	15	V.V.R
8-28	360	230	145	-	6	8	0.35"	3.0"	35	55	180	0.7	2	0.75"	0.3	2-WAY	10	V.V.R
8-29	290	205	115	-	6	8	0.35"	3.0"	35	55	180	0.6	2	0.75"	0.3	2-WAY	9	V.V.R
8-30	305	190	130	-	6	8	0.35"	3.0"	35	55	180	0.6	2	0.75"	0.3	2-WAY	8	C.V.R
8-31	435	300	175	-	7	9	0.35"	3.0"	35	55	180	0.9	2	0.75"	0.4	2-WAY	13	V.V.R
8-32	375	240	180	-	7	9	0.35"	3.0"	35	55	180	0.7	2	0.75"	0.3	2-WAY	10	V.V.R
8-33	290	205	110	-	6	8	0.35"	3.0"	35	55	180	0.6	2	0.75"	0.3	2-WAY	9	V.V.R
8-34	630	565	570	-	9	11	0.35"	3.0"	35	55	180	1.2	2	0.75"	0.6	2-WAY	18	V.V.R
8-35	555	555	555	-	8	10	0.35"	3.0"	35	55	180	1.2	2	0.75"	0.6	2-WAY	17	C.V.R
8-36	215	215	215	-	6	8	0.35"	3.0"	35	55	180	0.6	2	0.75"	0.3	2-WAY	9	C.V.R
8-37	165	85	35	-	6	8	0.35"	3.0"	35	55	180	0.5	2	0.75"	0.1	2-WAY	2	V.V.R
8-38 (7)	615	505	95	95	9	11	0.35"	3.0"	35	55	180	1.1	2	0.75"	0.5	2-WAY	16	V.V.R
8-39 (7)	1000	830	150	150	12	14	0.35"	3.0"	35	55	180	1.5	2	0.75"	0.7	2-WAY	22	V.V.R
8-40 (7)	615	500	95	95	9	11	0.35"	3.0"	35	55	180	1.0	2	0.75"	0.5	2-WAY	14	V.V.R
8-41 (7)	925	715	140	140	12	14	0.35"	3.0"	35	55	180	1.4	2	0.75"	0.7	2-WAY	20	V.V.R
8-42 (7)	675	675	675	-	9	11	0.35"	3.0"	35	55	180	1.2	2	0.75"	0.6	3-WAY	18	C.V.R
8-43 (7)	240	240	240	-	6	8	0.35"	3.0"	35	55	180	0.5	2	0.75"	0.2	2-WAY	6	C.V.R
8-44	450	250	250	-	7	9	0.35"	3.0"	35	55	180	0.8	2	0.75"	0.4	2-WAY	11	V.V.R
8-45	1170	585	175	180	12	14	0.35"	3.0"	35	55	180	1.4	2	0.75"	0.7	3-WAY	20	V.V.R
4 (8)	470	470	470	-	-	-	-	-	-	-	-	1.2	-	-	-	-	-	C.V.R

NOTES :

1 PROVIDE DUCT TRANSITION AT UNIT INLET WHERE UNIT INLET SIZE AND DUCT RUNOUT SIZE ARE DIFFERENT.
2 THE UNIT MAXIMUM SP IS THE PRESSURE DIFFERENCE BETWEEN THE UNIT INLET AND DISCHARGE INCLUDING REHEAT COIL AND SOUND ATTENUATOR. IT IS ALSO THE MINIMUM PRESSURE REQUIRED AT THE UNIT INLET TO OBTAIN THE RATED CFM.
3 PROVIDE HOSPITAL GRADE SOUND ATTENUATOR WHERE REQUIRED TO CONFORM TO THE MAXIMUM NC35 REQUIREMENT.
4 UNIT NOISE LEVEL SELECTION SHALL NOT EXCEED A ROOM NC OF 35 FROM BOTH AIRBORNE AND RADIATED NOISE, BASED ON A 10 DB ROOM ABSORPTION COFFICIENT (REFERENCE 10 [-12] WATTS) WITH 3" S.P. DIFFERENTIAL ACROSS UNIT AT MAXIMUM CFM SETTING.
5 HEATING COIL CAPACITY BASED ON WINTER MINIMUM CFM.
6 CONTROL TYPES: V.V.R.: VARIABLE VOLUME REHEAT TERMINAL; C.V.R.: CONSTANT VOLUME REHEAT TERMINAL
7 UNIT IS PART OF BASEMENT DEDUCT ALTERNATE - TO BE REMOVED FROM BID IF DEDUCT ALTERNATE IS TAKEN.
8 REBALANCE EXISTING BOX TO AIR AND WATER FLOWS AS INDICATED. REFER TO BASEMENT PIPING AND DUCTWORK PLANS FOR MORE INFORMATION.
9 AIR TERMINAL UNIT WITH AIRFLOW LISTED IN THIS COLUMN IS CONNECTED TO AN OCCUPANCY SENSOR PROVIDED BY DIVISION 26, FOR UNOCCUPIED CONTROL MODE. REFER TO CONTROL SEQUENCES ON SHEET H10, AND UNOCCUPIED HEATING & COOLING SETPOINTS IN "HVAC DESIGN DATA" SCHEDULE ON SHEET H2.

Revisions	Date

CONSULTANTS:

Heapy Engineering
Mechanical Electrical Commissioning Technology
Nationally Recognized Leader in Sustainability / LEED
1400 W Dorothy Lane, Dayton OH 45409-1310
Ph: 937-224-0861 Fax: 937-224-5777 www.heapy.com
PROJECT NO. 2010-04024 FIRM LICENSE NO. 01528

STATE OF OHIO — JOHN A. BLACK 49341 — REGISTERED PROFESSIONAL ENGINEER

ARCHITECT/ENGINEERS:

JOHN POE ARCHITECTS
116 EAST THIRD STREET
DAYTON, OHIO
45402-2139
937 461 3290 PHONE
937 461 0260 FAX
jpa@johnpoe.com

Drawing Title: SCHEDULES AND DETAILS

Approved: Project Director

Project Title: RENOVATE CLC BUILDING 211 WEST

Location: Chillicothe, Ohio

Date: 09/06/2013 | Checked: JAC | Drawn: TEG

Project No. VA Project No. 53B-107 JPA Project No. 11001.00

Building Number: 211

Drawing Number: H3

Dwg. 76 of 132

Office of Construction and Facilities Management
Department of Veterans Affairs

9/6/2013 1:30:42 PM

FULLY SPRINKLERED

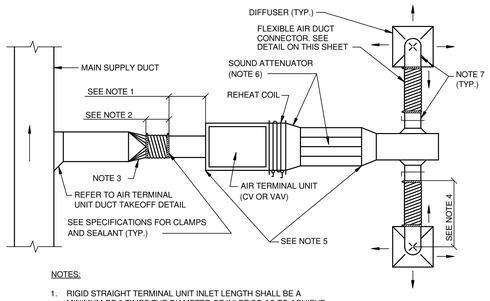

NOTES:

1. RIGID STRAIGHT TERMINAL UNIT INLET LENGTH SHALL BE A MINIMUM OF 3 TIMES THE DIAMETER OF INLET SO AS TO ACHIEVE ACCURATE AIRFLOW SENSOR READINGS.
2. A FLEXIBLE AIR DUCT CONNECTOR IS NOT MANDATORY FOR INLET TO THIS BOX, BUT ALLOWED TO ACCOMMODATE MINOR OFFSETS. MAXIMUM LENGTH 3'-0".
3. PROVIDE DUCT TRANSITION WHERE SCHEDULED DUCT RUNOUT SIZE TO UNIT IS DIFFERENT THAN TERMINAL UNIT INLET SIZE.
4. FLEXIBLE AIR DUCT CONNECTORS, WHEN USED FROM TERMINAL UNIT SUPPLY AIR DUCT TO DIFFUSER, SHALL NOT EXCEED 5'-0". USE RIGID ELBOWS FOR CHANGE OF DIRECTION GREATER THAN 45°.
5. COMPONENT ARRANGEMENT MAY VARY BY MANUFACTURER. PROVIDE INSULATION W/VAPOR BARRIER FOR CONNECTING DUCT SECTIONS.
6. PROVIDE SOUND ATTENUATOR IF REQUIRED TO MEET DESIGN ROOM NC. PROVIDE DUCT TRANSITION BETWEEN TERMINAL UNIT AND SOUND ATTENUATOR WHERE ATTENUATOR SIZE DIFFERS FROM TERMINAL UNIT OUTLET SIZE.
7. DUCT RUNOUT TO DIFFUSERS SHALL BE SAME SIZE AS THE DIFFUSER NECK SIZE UNLESS OTHERWISE NOTED.

DUCT CONNECTIONS-AIR TERMINAL UNITS

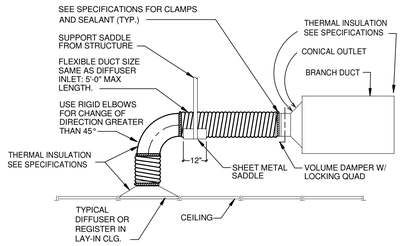

FLEXIBLE AIR DUCT CONNECTOR

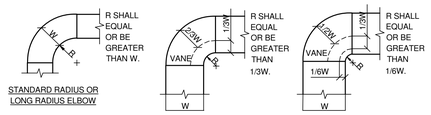

NOTES:

1. THE INTERIOR SURFACE OF ALL RADIUS ELBOWS SHALL BE MADE ROUND.
2. ALL STANDARD RADIUS ELBOWS CAN BE SUBSTITUTED WITH SHORT RADIUS ELBOWS. ALL SHORT RADIUS ELBOWS SHALL HAVE VANES. VANES SHALL BE CONSTRUCTED, SUPPORTED AND FASTENED AS RECOMMENDED BY SMACNA.

DUCTWORK RADIUS ELBOWS

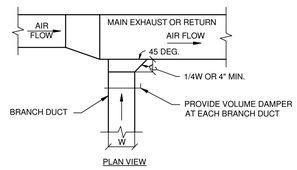

EXHAUST OR RETURN BRANCH DUCTWORK

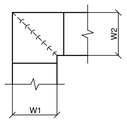

NOTES:

1. ALL VANE ELBOWS SHALL BE CONSTRUCTED AND INSTALLED AS DETAILED BY SMACNA.
2. WHEN W1 DOES NOT EQUAL W2, VANE SHALL BE SINGLE THICKNESS VANE TYPE REGARDLESS OF W DIMENSION.
3. ALL SINGLE THICKNESS VANES SHALL HAVE A 2" RADIUS, 1 1/2" MAXIMUM SPACE BETWEEN VANES AND A 3/4" TRAILING EDGE.
4. WHEN W EQUALS W2 AND W1 IS GREATER THAN 20", VANES SHALL BE DOUBLE VANE TYPE.

DUCTWORK SQUARE VANE ELBOWS

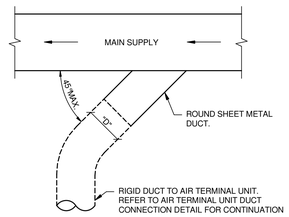

SUPPLY DUCT TAKEOFF - AIR TERMINAL UNITS

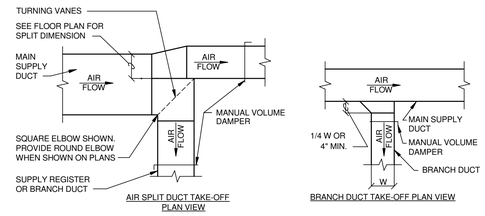

THE BRANCH DUCT TAKE-OFF MAY BE USED FOR UP TO 15% OF THE MAIN DUCT CFM ANYTIME, AND UP TO 40% WHEN THE MAIN DUCT VELOCITY IS 1000 FPM OR LESS. THE AIR SPLIT DUCT TAKE-OFF SHALL BE USED IN ALL OTHER CASES

SUPPLY DUCTWORK TAKE-OFFS

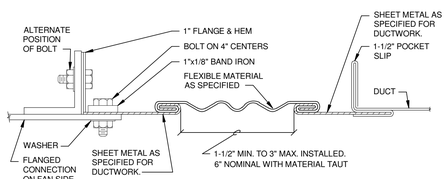

RECTANGULAR FLEXIBLE CONNECTION

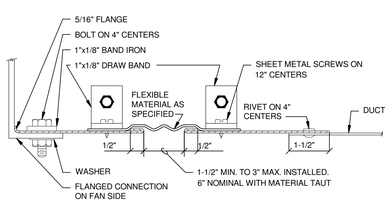

ROUND FLEXIBLE CONNECTION

FLEXIBLE DUCT CONNECTIONS

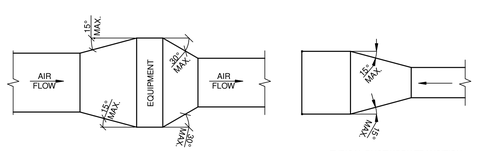

TYPICAL DUCTWORK TRANSITION WITH EQUIPMENT MOUNTED IN DUCT PLAN OR SIDE VIEW

TYPICAL DUCTWORK TRANSITION PLAN OR SIDE VIEW

NOTE:
UNLESS OTHERWISE INDICATED ON PLANS, MAXIMUM ANGLES SHOWN SHALL APPLY.

DUCTWORK TRANSITIONS

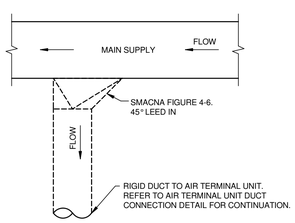

ALTERNATE SUPPLY DUCT TAKEOFF - AIR TERMINAL UNITS

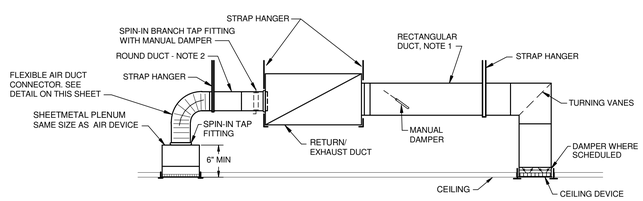

NOTES:

1 BRANCH DUCT TAKE-OFF WITH MANUAL DAMPER.

2 BRANCH DUCT SIZES, UNLESS NOTED ON PLANS ARE TO BE SIZED AS FOLLOWS:
100 CFM AND LESS - 6" DIA.
101 CFM TO 250 CFM - 8" DIA.
251 CFM TO 400 CFM - 10" DIA.
401 CFM TO 700 CFM - 12" DIA.

RETURN OR EXHAUST GRILLE/REGISTER CONNECTION

Revisions	Date

CONSULTANTS:

Heapy Engineering
Mechanical Electrical Commissioning Technology
Nationally Recognized Leader in Sustainability / LEED
1400 W Dorothy Lane, Dayton OH 45409-1310
Ph: 937-224-0861 Fax: 937-224-5777 www.heapy.com
PROJECT NO. 2010-04024 FIRM LICENSE NO. 01528

STATE OF OHIO — JOHN A. BLACK 49341 — REGISTERED PROFESSIONAL ENGINEER

ARCHITECT/ENGINEERS:

JOHN POE ARCHITECTS
116 EAST THIRD STREET
DAYTON, OHIO
45402-2130
937 461 3290 PHONE
937 461 0260 FAX
jpa@johnpoe.com

Drawing Title: DETAILS

Approved: Project Director

Project Title: RENOVATE CLC BUILDING 211 WEST

Location: Chillicothe, Ohio

Date: 09/06/2013 | Checked: JAC | Drawn: TEG

Project No.
VA Project No. 538-107
JPA Project No. 11001.00

Building Number: 211

Drawing Number: H4

Dwg. 77 of 132

Office of Construction and Facilities Management
Department of Veterans Affairs

9/6/2013 1:30:43 PM

FULLY SPRINKLERED

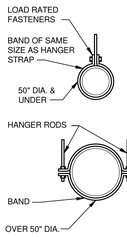

HANGER STRAPS OR RODS			
MAX. DUCT DIA. - IN.	QUANTITY/SIZE IN.	MAX. LOAD LBS.	MAX. SPACING IN.
26	ONE 1 x 22 GA. STRAP	260	144
36	ONE 1 x 18 GA. STRAP	420	144
50	ONE 1 x 16 GA. STRAP	700	144
60	TWO 3/8 DIA. RODS	1320	144
84	TWO 1/2 DIA. RODS	2500	144

NOTE:
TABULATED DATA FROM SMACNA ALLOWS FOR DUCT REINFORCING AND INSULATION, BUT NO EXTERNAL LOAD.

ROUND DUCT HANGERS

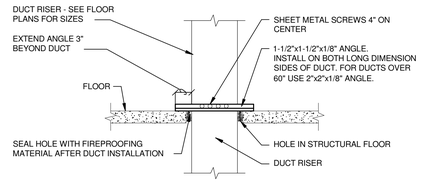

0.5 INCH WG TO 2 INCHES WG (LOW PRESSURE) DUCT RISER SUPPORT

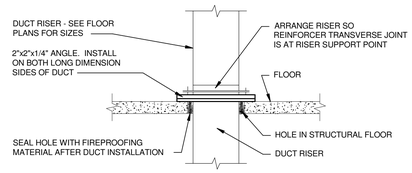

2 INCHES WG TO 4 INCHES WG (HIGH AND MEDIUM PRESSURE) DUCT RISER SUPPORT

NOTE:
ALL DUCT WORK RISERS WHICH ARE RUN EXPOSED, SUCH AS THRU ATTIC FLOORS AND MECHANICAL ROOM FLOORS SHALL BE PROVIDED WITH A 3" HIGH CONCRETE CURB AROUND OPENING FOR DUCT.

DUCT RISER SUPPORTS

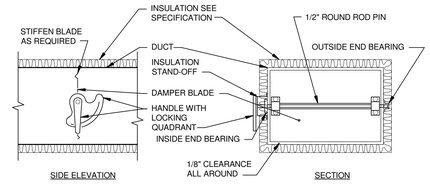

NOTES:

1. DELETE INSULATION STAND-OFF ON DUCTWORK WITHOUT EXTERIOR INSULATION.
2. DETAIL SHOWS SINGLE BLADE DAMPER. DAMPER INSTALLATION SHALL BE SIMILAR FOR MULTI-BLADE DAMPERS & ROUND DAMPERS.

VOLUME DAMPER DETAIL

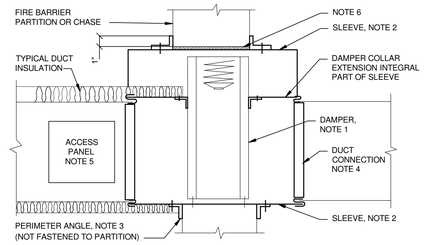

NOTES:

1. A VERTICAL DAMPER IS SHOWN. HORIZONTAL DAMPER INSTALLATION, IS SIMILAR. FOLLOW DAMPER MANUFACTURER'S INSTRUCTIONS, INCLUDING FASTENER OPTIONS AND GAGES FOR SLEEVE AND PERIMETER ANGLES. FIRE DAMPERS MUST BE INSTALLED IN THE PARTITION OR FLOOR AND NOT OUTSIDE THE PENETRATION.
2. GALVANIZED SLEEVE: GAGE NOT LESS THAN CONNECTING DUCT. FASTEN SLEEVE TO DAMPER FRAME AND TO PERIMETER ANGLES.
3. PERIMETER ANGLES: GALVANIZED STEEL, NOT LESS THAN 1-1/2"x1-1/2" , 14 GAGE, TO PROVIDE 1" MINIMUM OVERLAP OF OPENING ON ALL 4 SIDES.
4. BREAKAWAY DUCT CONNECTION: CONTRACTOR'S OPTION OF TYPES SHOWN IN SMACNA.
5. ACCESS PANELS: SIZE AND LOCATION TO PERMIT SERVICING THE FUSIBLE LINK OR LINKS.
6. PROVIDE 1/4" TO 1/2" CLEARANCE ON HEIGHT AND WIDTH. IN ORDER TO MAINTAIN U.L. RATING FOR FIRE DAMPER, DO NOT FILL THIS OPEN SPACE WITH FIRESTOP MATERIAL.
7. ALL DUCT WORK RISERS WHICH ARE RUN EXPOSED, SUCH AS THRU ATTIC FLOORS AND MECHANICAL ROOM FLOORS, SHALL BE PROVIDED WITH 3" HIGH CONCRETE CURB AROUND OPENING FOR DUCT.

SECTION THRU FIRE DAMPER INSTALLATION

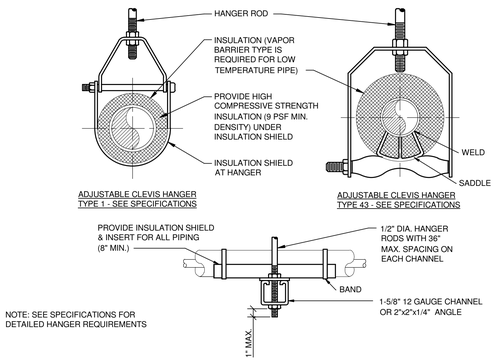

MAXIMUM PIPE/TUBING SUPPORT SPACING																	
NOM. SIZE	IN.	THRU 3/4	1	1 1/4	1 1/2	2	2 1/2	3	4	5	6	8	10	12	14	16	18	20	24
PIPE	FT.	7	7	7	9	10	11	12	14	16	17	19	22	23	25	27	28	30	32
TUBING	FT.	5 FT	6	7	8	8	9	10	12	13	14	16	-	-	-	-	-	-	-
NOTE: FOR TRAPEZE HANGER TAKE SPACING OF SMALLEST SIZE ON TRAPEZE.																			

PIPE HANGERS

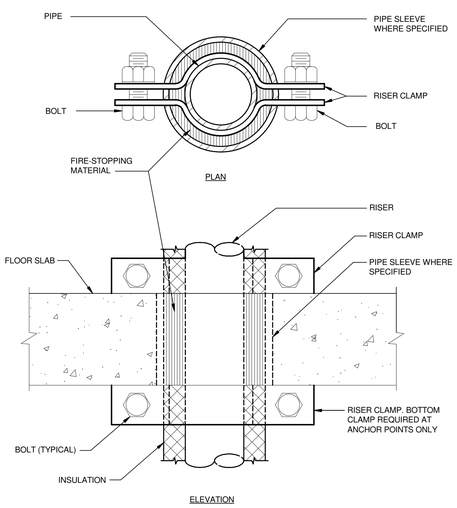

SUPPORT/ANCHOR FOR PIPE RISERS

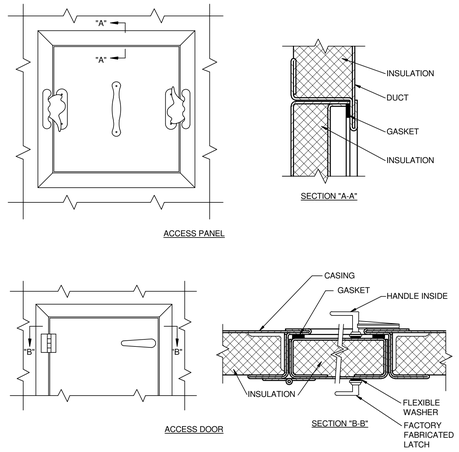

NOTES:

1. LATCHES SHALL BE OF THE WEDGE TYPE TO CLOSE DOORS TIGHTLY.
2. HINGES ON THE ACCESS DOORS SHALL HAVE NON-CORROSIVE PINS.
3. SEE SMACNA 2005, FIGURE 9-15

ACCESS PANEL AND DOOR DETAIL

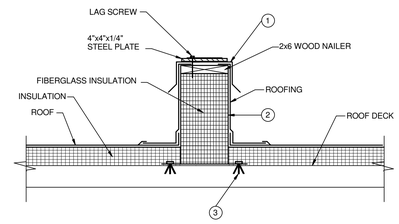

1. 18 GAUGE GALVANIZED STEEL COUNTER-FLASHING.
2. WELDED 14 GAUGE EQUIPMENT SUPPORT CURB, MEETING ASTM A-446, 525, 526 AND 527 REQUIREMENTS, WITH WELDED CORNERS WITH SEAMS JOINED BY CONTINUOUS WELDS. CURB SHALL BE INTERNALLY REINFORCED WITH BULKHEADS AND SPREADERS, 24" ON CENTER TO MEET LOAD RATING OF EQUIPMENT. CURB TO EXTEND 6" BEYOND EQUIPMENT. REFER TO FLOOR PLANS FOR HEIGHT.
3. SECURE CURB TO ROOF WITH EXPANSION BOLTS (CONCRETE ROOF) OR RUST RESISTANT BOLTS (METAL DECK AND BAR JOIST ROOF), 12" O.C.

EQUIPMENT/DUCT SUPPORT ROOF CURB

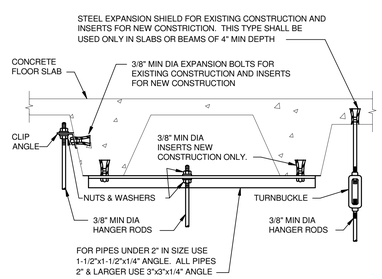

SECURING HANGER RODS IN CONCRETE

Revisions	Date

CONSULTANTS:

Heapy Engineering
Mechanical Electrical Commissioning Technology
Nationally Recognized Leader in Sustainability / LEED
1400 W Dorothy Lane, Dayton OH 45409-1310
Ph: 937-224-0861 Fax: 937-224-5777 www.heapy.com
PROJECT NO. 2010-04024 FIRM LICENSE NO. 01528

STATE OF OHIO — JOHN A. BLACK 49341 — REGISTERED PROFESSIONAL ENGINEER

ARCHITECT/ENGINEERS:

JOHN POE ARCHITECTS
116 EAST THIRD STREET
DAYTON, OHIO
45402-2130
937 461 3290 PHONE
937 461 0260 FAX
jpa@johnpoe.com

Drawing Title: DETAILS

Approved: Project Director

Project Title: RENOVATE CLC BUILDING 211 WEST

Location: Chillicothe, Ohio

Date: 09/06/2013 | Checked: JAC | Drawn: TEG

Project No. VA Project No. 538-107 JPA Project No. 11001.00

Building Number: 211

Drawing Number: H5

Dwg. 78 of 132

Office of Construction and Facilities Management
Department of Veterans Affairs

9/6/2013 1:30:44 PM

FULLY SPRINKLERED

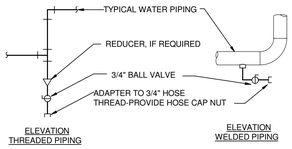

TYPICAL CHILLED AND HOT WATER PIPING DRAIN VALVE CONNECTIONS

NOTES:
1. DRAIN ALL LOW POINTS AS INDICATED ABOVE.
2. WHERE SCALE POCKETS ARE SHOWN ON PIPE RISER DIAGRAMS AND/OR PLANS, LOCATE DRAIN AT BOTTOM OF SCALE POCKET.

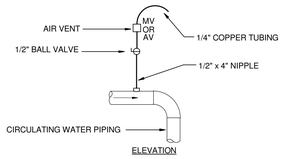

TYPICAL MANUAL AIR VENT

NOTES:
1. VENT ALL HIGH POINTS AS INDICATED ABOVE.
2. IF AUTOMATIC AIR VENTS ARE USED, PIPE DISCHARGE TO NEAREST DRAIN.

DRAIN VALVE AND AIR VENT CONNECTIONS (HYDRONIC SYSTEMS)

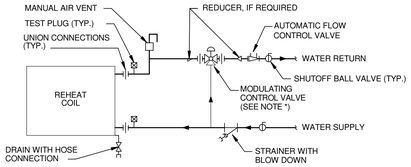

NOTE: THIS DETAIL APPLIES TO VAV/CV REHEAT UNITS AND UNIT HEATERS.

* REFER TO UNIT HEATER AND AIR TERMINAL UNIT SCHEDULES ON SHEET H3 FOR VALVE TYPE (2-WAY OR 3-WAY)

UNIT HEATER & TERMINAL UNIT WATER COILS - PIPING CONNECTIONS

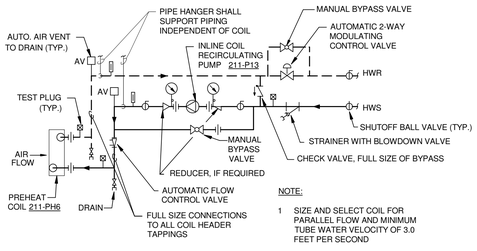

NOTE:

1 SIZE AND SELECT COIL FOR PARALLEL FLOW AND MINIMUM TUBE WATER VELOCITY OF 3.0 FEET PER SECOND

NOTE: THIS DETAIL APPLIES TO PREHEAT COIL 211-PH6.

PREHEAT COIL WITH RUNAROUND PUMP (HOT WATER) - PIPING CONNECTIONS

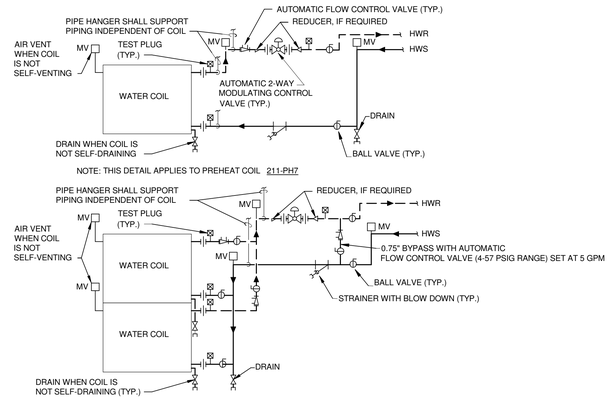

NOTE: THIS DETAIL APPLIES TO PREHEAT COIL 211-PH7

NOTE: THIS DETAIL APPLIES TO PREHEAT COIL 211-PH8

1. WHEN COIL IS INCLUDED IN CASING MOUNTED ON VIBRATION ISOLATORS THE FIRST 2 HANGERS FOR EACH PIPE SHALL BE SPRING & NEOPRENE TYPE. TYPE "H" FOR 4" DIA. PIPE & SMALLER. TYPE "H-P" FOR 5" DIA. PIPE & LARGER.
2. PIPING SHALL BE INSTALLED IN SUCH MANNER THAT IT WILL NOT BLOCK THE SWING OR USE OF ACCESS DOORS OR PANELS; NEITHER SHALL IT BLOCK THE SERVICING OF FILTERS, VALVES, OR EQUIPMENT.
3. THE FLOW ELEMENT MAY BE INSTALLED IN THE SUPPLY PIPING IF THE REQUIRED MINIMUM UPSTREAM AND DOWNSTREAM DIMENSIONS CANNOT BE OBTAINED IN THE RETURN PIPING.

PREHEAT COILS (HOT WATER) - PIPING CONNECTIONS

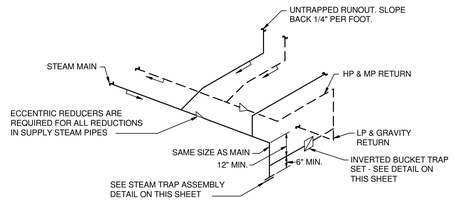

NOTES :

1 SLOPE MAINS AND BRANCHES DOWN 1" PER 40 FEET IN DIRECTION OF FLOW UNLESS SHOWN OTHERWISE.

2 LIMIT UNTRAPPED, COUNTERFLOW, RUNOUTS TO 10 FEET MAXIMUM.

3 END OF MAIN SHOWN, LOW POINT IN STEAM MAIN SIMILAR.

TYPICAL STEAM LINE & DRIP PIPING

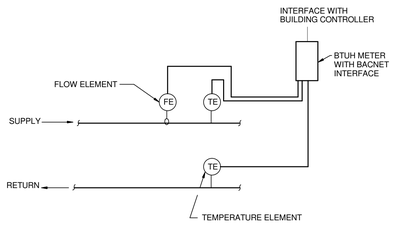

NOTE:

1. MAINTAIN UPSTREAM AND DOWN STREAM DISTANCES RECOMMENDED BY METER MANUFACTURES

WATER FLOW MEASURING STATION (WITH BTU METER)

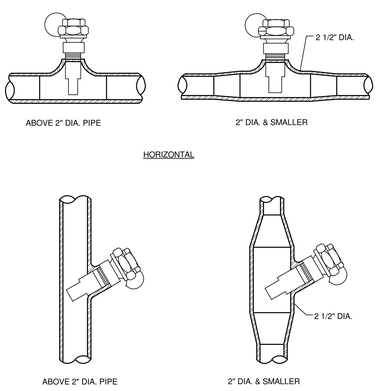

INSTALLATION OF THERMOMETER WELLS

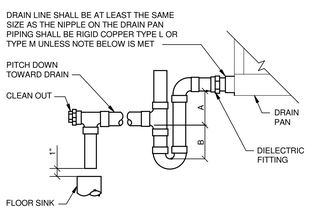

NOTE:
1. CPVC PIPE MAY BE USED ONLY IF APPROVED BY LOCAL VA AND IS INDOORS AND DOES NOT PASS THROUGH RATED BARRIERS.
2. DIELECTRIC FITTING TO BE USED WHEN TWO DISSIMILAR METALS ARE TO BE CONNECTED.

UNIT TYPE	A	B
DRAW THRU	2" PLUS X	X
BLOW THRU	1" MINIMUM	2X

WHERE X = STATIC PRESSURE IN PAN

AIR HANDLING UNIT DRAIN TRAP DETAIL

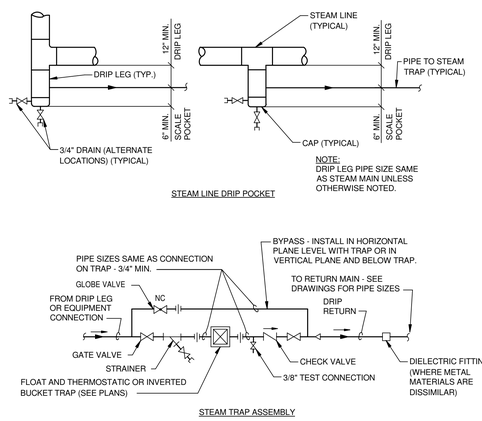

STEAM LINE DRIP POCKET STEAM TRAP ASSEMBLY

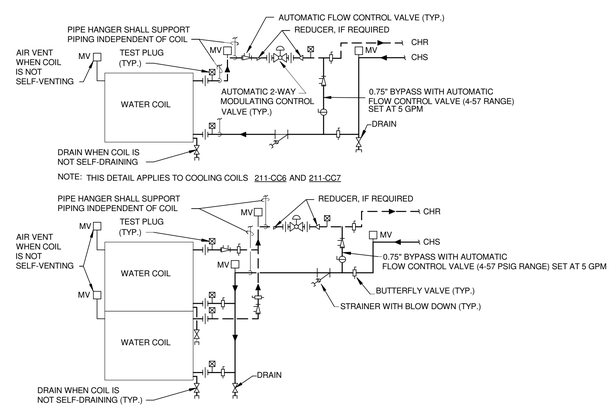

1. WHEN COIL IS INCLUDED IN CASING MOUNTED ON VIBRATION ISOLATORS THE FIRST 2 HANGERS FOR EACH PIPE SHALL BE SPRING & NEOPRENE TYPE. TYPE "H" FOR 4" DIA. PIPE & SMALLER. TYPE "H-P" FOR 5" DIA. PIPE & LARGER.
2. PIPING SHALL BE INSTALLED IN SUCH MANNER THAT IT WILL NOT BLOCK THE SWING OR USE OF ACCESS DOORS OR PANELS; NEITHER SHALL IT BLOCK THE SERVICING OF FILTERS, VALVES, OR EQUIPMENT.
3. THE FLOW ELEMENT MAY BE INSTALLED IN THE SUPPLY PIPING IF THE REQUIRED MINIMUM UPSTREAM AND DOWNSTREAM DIMENSIONS CANNOT BE OBTAINED IN THE RETURN PIPING.

CHILLED WATER COILS - PIPING CONNECTIONS

Revisions	Date

CONSULTANTS:

Heapy Engineering
Mechanical Electrical Commissioning Technology
Nationally Recognized Leader in Sustainability / LEED
1400 W Dorothy Lane, Dayton OH 45409-1310
Ph: 937-224-0861 Fax: 937-224-5777 www.heapy.com
PROJECT NO. 2010-04024 FIRM LICENSE NO. 01528

STATE OF OHIO — JOHN A. BLACK 49341 — REGISTERED PROFESSIONAL ENGINEER

ARCHITECT/ENGINEERS:

JOHN POE ARCHITECTS
116 EAST THIRD STREET
DAYTON, OHIO
45402-2130
937 461 3290 PHONE
937 461 0260 FAX
jpa@johnpoe.com

Drawing Title: DETAILS

Approved: Project Director

Project Title: RENOVATE CLC BUILDING 211 WEST

Location: Chillicothe, Ohio

Date: 09/06/2013 | Checked: JAC | Drawn: TEG

Project No. VA Project No. 538-107 JPA Project No. 11001.00

Building Number: 211

Drawing Number: H6

Dwg. 79 of 132

Office of Construction and Facilities Management
Department of Veterans Affairs

9/6/2013 1:30:45 PM

FULLY SPRINKLERED

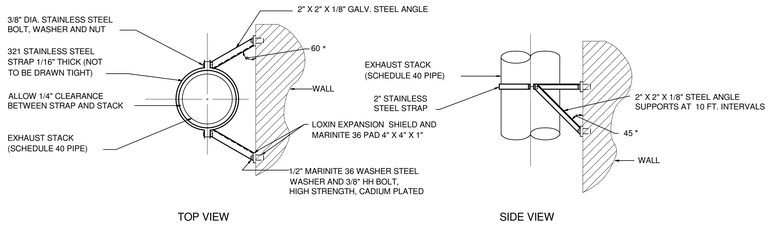

GENERATOR STACK EXHAUST GUIDE

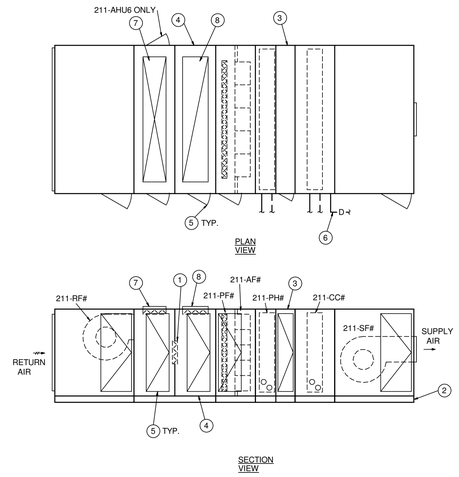

NOTE: REFER TO FLOOR PLANS FOR DOOR SWING AND PIPING HAND OF EACH UNIT.

AIR HANDLING UNIT NOTES

1. RETURN AIR DAMPERS.
2. 12" HIGH BASE RAIL, OR ANGLE FRAME
3. ACCESS SECTION.
4. MIXING SECTION.
5. ACCESS DOOR. SEE PLANS FOR UNIT HAND.
6. EXTEND FULL SIZE DRAIN PIPE TO FLOOR DRAIN.
7. RELIEF AIR DAMPERS.
8. OUTSIDE AIR INTAKE DAMPERS.

AIR HANDLING UNIT 211-AHU6, 211-AHU7, AND 211-AHU8 LAYOUT

SCALE: NONE

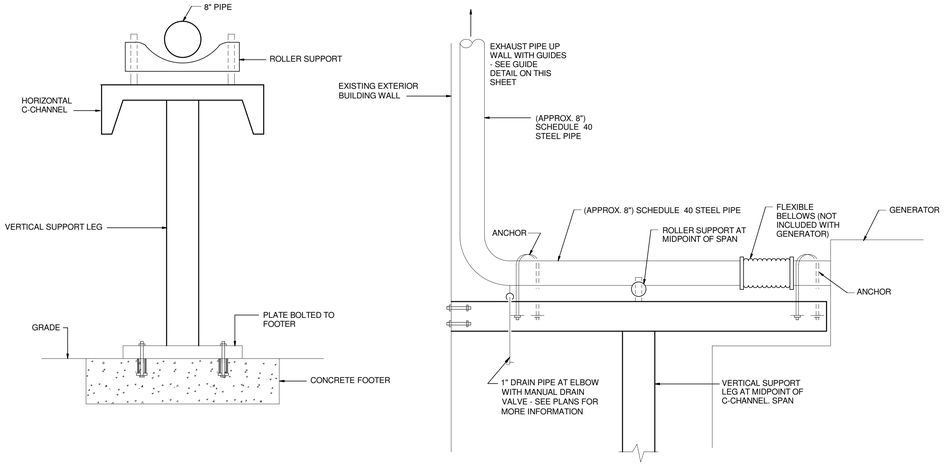

NOTE: SIZE, TYPE, AND FINAL DETAIL OF ALL STRUCTURAL MEMBERS SHALL BE THE RESPONSIBILITY OF THE HVAC CONTRACTOR. COORDINATE REQUIREMENTS WITH GENERATOR SUPPLIER AND SUBMIT SEALED DRAWINGS FOR EXHAUST PIPE SUPPORT STRUCTURE, TO MATCH JOB-SPECIFIC EQUIPMENT.

GENERATOR EXHAUST PIPE DETAIL

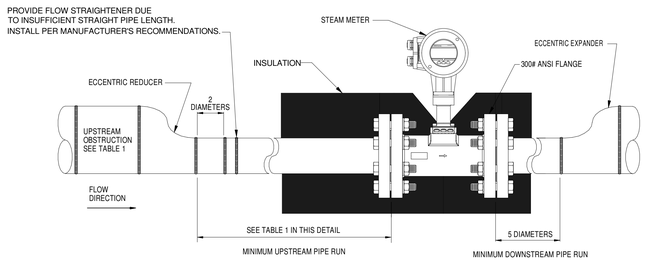

TABLE 1	
OBSTRUCTION	MINIMUM UPSTREAM PIPE RUN REQUIRED
SINGLE 90	12/20 DIAMETERS
TEE	12/20 DIAMETERS
REDUCER/ EXPANDER	12/20 DIAMETERS
TWO 90'S SAME PLANE	17/30 DIAMETERS
BALL/GATE VALVE FULLY OPEN	17/30 DIAMETERS
TWO 90'S OUT OF PLANE	22/40 DIAMETERS
CONTROL VALVE	27/50 DIAMETERS
PRV	27/50 DIAMETERS

TABLE 1: UPSTREAM STRAIGHT LENGTH OF PIPE REQUIRED FOR BASIS OF DESIGN METER, WITH/WITHOUT FLOW STRAIGHTENER. VERIFY EXACT REQUIREMENTS WITH ACTUAL METER USED.

STEAM FLOW METER INSTALLATION DETAIL

Revisions	Date

CONSULTANTS:

Heapy Engineering
Mechanical Electrical Commissioning Technology
Nationally Recognized Leader in Sustainability / LEED
1400 W Dorothy Lane, Dayton OH 45409-1310
Ph: 937-224-0861 Fax: 937-224-5777 www.heapy.com
PROJECT NO. 2010-04024 FIRM LICENSE NO. 01528

STATE OF OHIO — JOHN A. BLACK 49341 — REGISTERED PROFESSIONAL ENGINEER

ARCHITECT/ENGINEERS:

JOHN POE ARCHITECTS
116 EAST THIRD STREET
DAYTON, OHIO
45402-2130
937 461 3290 PHONE
937 461 0260 FAX
jpa@johnpoe.com

Drawing Title: DETAILS

Approved: Project Director

Project Title: RENOVATE CLC BUILDING 211 WEST

Location: Chillicothe, Ohio

Date: 09/06/2013 | Checked: JAC | Drawn: TEG

Project No. VA Project No. 538-107 JPA Project No. 11001.00

Building Number: 211

Drawing Number: H7

Dwg. 80 of 132

Office of Construction and Facilities Management

Department of Veterans Affairs

9/6/2013 1:30:45 PM

FULLY SPRINKLERED

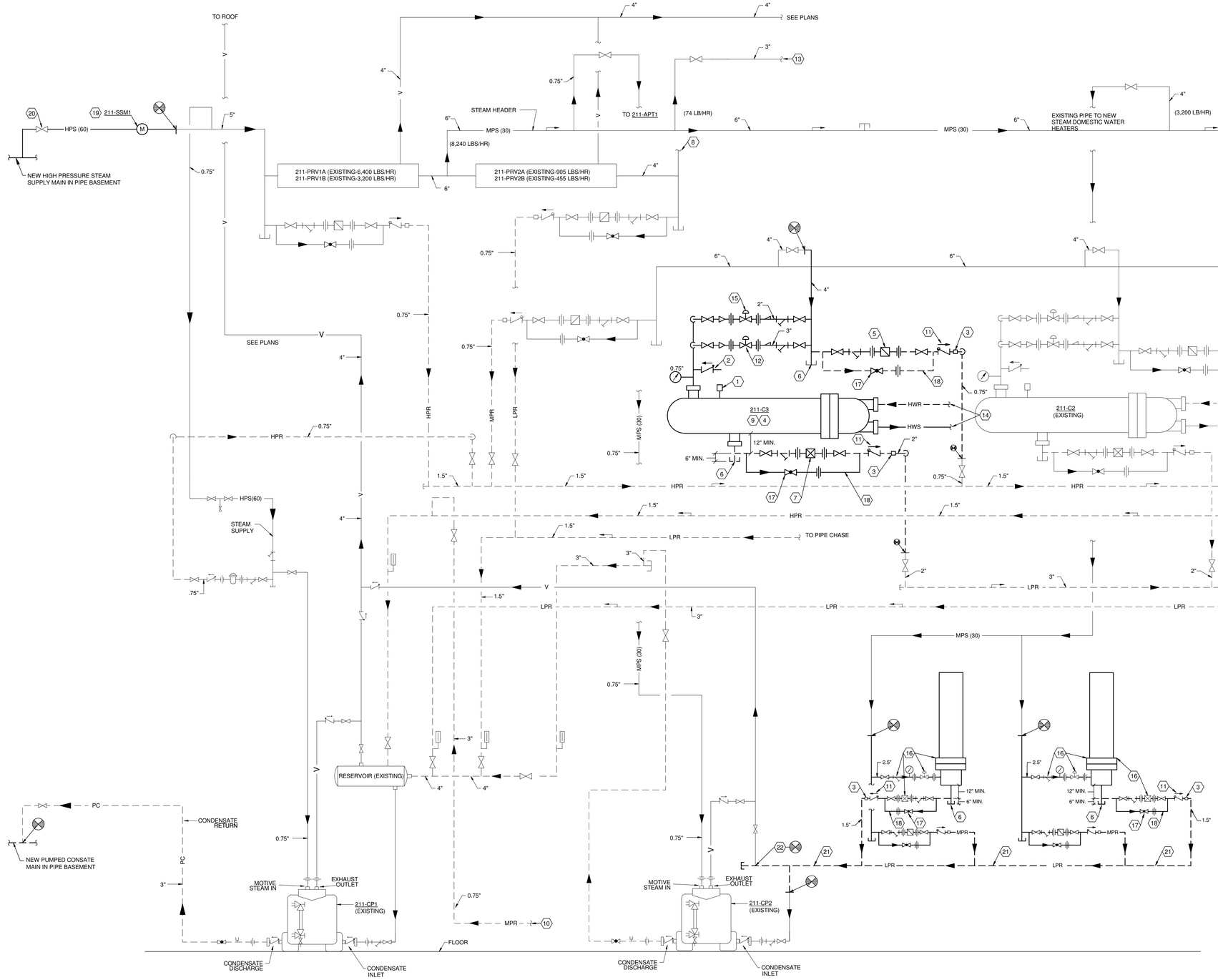

STEAM SYSTEM SCHEMATIC

SCALE: NONE

GENERAL NOTES

A HEAVIER LINEWEIGHTS ON THIS SHEET INDICATE NEW WORK TO BE PROVIDED AS PART OF THIS PROJECT. LIGHTER LINEWEIGHTS INDICATE EXISTING WORK, PROVIDED UNDER PREVIOUS PROJECT.

NOTES

1 THERMOSTATIC AIR VENT.

2 0.5" CHECK VALVE VACUUM BREAKER.

3 DIELECTRIC FITTING (WHERE RETURN IS COPPER).

4 CONVERTER SHALL BE SUSPENDED HIGH ENOUGH TO ALLOW GRAVITY DRAINAGE OF CONDENSATE TO EXISTING CONDENSATE RECEIVER ASSOCIATED WITH EXISTING PRESSURE POWERED CONDENSATE PUMP.

5 STEAM LINE DRIP ASSEMBLY WITH INVERTED BUCKET TRAP. REFER TO DETAIL ON SHEET H6.

6 SCALE POCKET.

7 F & T TRAP ASSEMBLY. REFER TO DETAIL ON SHEET H6.

8 EXISTING LOW PRESSURE STEAM SUPPLY PIPING TO ATTIC SERVES NEW STEAM HUMIDIFIERS.

9 PROVIDE SADDLE SUPPORTS AND ANGLE FRAME, AND SUPPORT HEAT EXCHANGER OFF FLOOR.

10 FROM 211-APT1 MOTIVE STEAM SUPPLY DRIP AND TRAP ASSEMBLY DISCHARGE.

11 SPRING LOADED CHECK VALVE.

12 AUTOMATIC CONTROL VALVE. SIZE FOR 2/3 STEAM LOAD CAPACITY.

13 EXISTING STEAM PIPING SERVING PREHEAT COIL AND HUMIDIFIER ASSOCIATED WITH EXISTING AIR HANDLING UNIT IN BASEMENT SERVING LIBRARY.

14 REFER TO HOT WATER SYSTEM SCHEMATIC ON SHEET H9.

15 AUTOMATIC CONTROL VALVE. SIZE FOR 1/3 STEAM LOAD CAPACITY.

16 NEW STEAM SEMI-INSTANTANEOUS DOMESTIC WATER HEATER PROVIDED BY DIVISION 22, COMPLETE WITH STEAM INLET STRAINER, MODULATING STEAM CONTROL VALVE, AND F&T CONDENSATE TRAP. PROVIDE ADDITIONAL STEAM AND CONDENSATE PIPING AND SPECIALTIES AS SHOWN.

17 GLOBE VALVE.

18 INSTALL BYPASS IN HORIZONTAL PLANE LEVEL WITH TRAP OR VERTICAL PLANE AND BELOW TRAP.

19 PROVIDE NEW STEAM VORTEX METER. REFER TO SHEET 211-H6 AND DETAIL ON SHEET H6 FOR MORE INFORMATION.

20 RELOCATE EXISTING BUILDING ISOLATION GATE VALVE TO NEW PIPING. REFER TO SHEETS 211-

21 REMOVE EXISTING CONDENSATE HEADER ASSOCIATED WITH 211-CP2, AND REPLACE WITH NEW. AFTER INSTALLATION OF NEW DOMESTIC WATER HEATERS IS COMPLETE, INSTALL NEW CONDENSATE RETURN HEADER AS HIGH AS POSSIBLE, BASED UPON INSTALLED HEIGHT OF NEW WATER HEATER F&T TRAPS (CONDENSATE SHALL FLOW BY GRAVITY FROM OUTLET OF F&T TRAPS INTO TOP OF NEW HEADER. NEW HEADER SHALL BE MINIMUM 6" DIAMETER SCHEDULE 80 STEEL PIPE, MINIMUM 10'-0" LONG.

22 DISCONNECT EXISTING VENT PIPE FROM EXISTING HEADER, AND MODIFY AS REQUIRED TO RECONNECT TO TOP OF NEW HEADER AS SHOWN.

Revisions	Date

CONSULTANTS:

Heapy Engineering
Mechanical Electrical Commissioning Technology
Nationally Recognized Leader in Sustainability / LEED
1400 W Dorothy Lane, Dayton OH 45409-1310
Ph: 937-224-0861 Fax: 937-224-5777 www.heapy.com
PROJECT NO. 2010-04024 FIRM LICENSE NO. 01528

STATE OF OHIO — JOHN A. BLACK 49341 — REGISTERED PROFESSIONAL ENGINEER

ARCHITECT/ENGINEERS:

JOHN POE ARCHITECTS
116 EAST THIRD STREET
DAYTON, OHIO
45402-2130
937 461 3290 PHONE
937 461 0260 FAX
jpa@johnpoe.com

Drawing Title: STEAM SYSTEM SCHEMATIC

Approved: Project Director

Project Title: RENOVATE CLC BUILDING 211 WEST

Location: Chillicothe, Ohio

Date: 09/06/2013 | Checked: JAC | Drawn: TEG

Project No. VA Project No. 538-107 JPA Project No. 11001.00

Building Number: 211

Drawing Number: H8

Dwg. 81 of 132

Office of Construction and Facilities Management
Department of Veterans Affairs

9/6/2013 1:30:46 PM

FULLY SPRINKLERED

GENERAL NOTES

A HEAVIER LINEWEIGHTS ON THIS SHEET INDICATE NEW WORK TO BE PROVIDED AS PART OF THIS PROJECT. LIGHTER LINEWEIGHTS INDICATE EXISTING WORK, PROVIDED UNDER PREVIOUS PROJECT.

NOTES

1. THERMOSTATIC AIR VENT.
2. CONVERTER SHALL BE SUSPENDED HIGH ENOUGH TO ALLOW GRAVITY DRAINAGE OF CONDENSATE TO CONDENSATE RECEIVER ASSOCIATED WITH PRESSURE POWERED CONDENSATE PUMP.
3. EXTEND SAFETY RELIEF VALVE DISCHARGE TO FLOOR DRAIN.
4. PROVIDE AN ANGLE FRAME TO SUPPORT PUMP AND PIPING OFF WALL.
5. PROVIDE HOSE CONNECTION AND SCREW-ON CAP.
6. AUTOMATIC ISOLATION CONTROL VALVE.

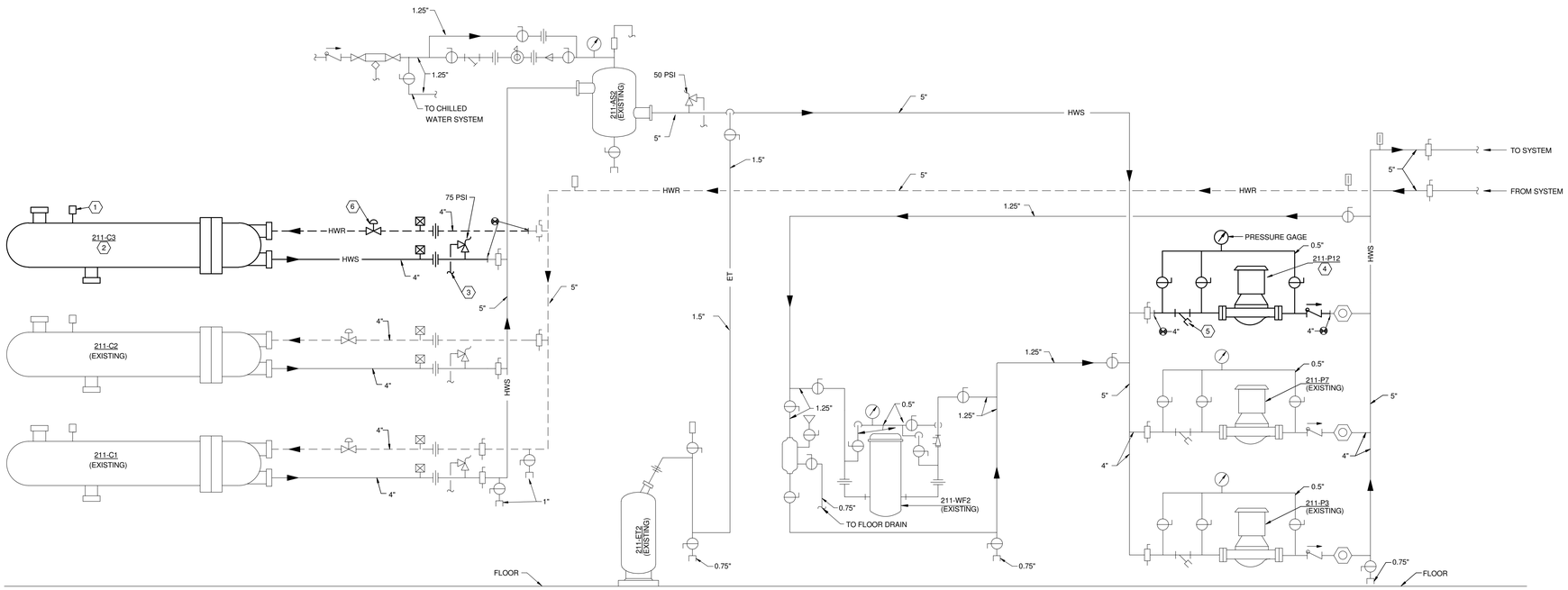

HOT WATER SYSTEM SCHEMATIC

SCALE: NONE

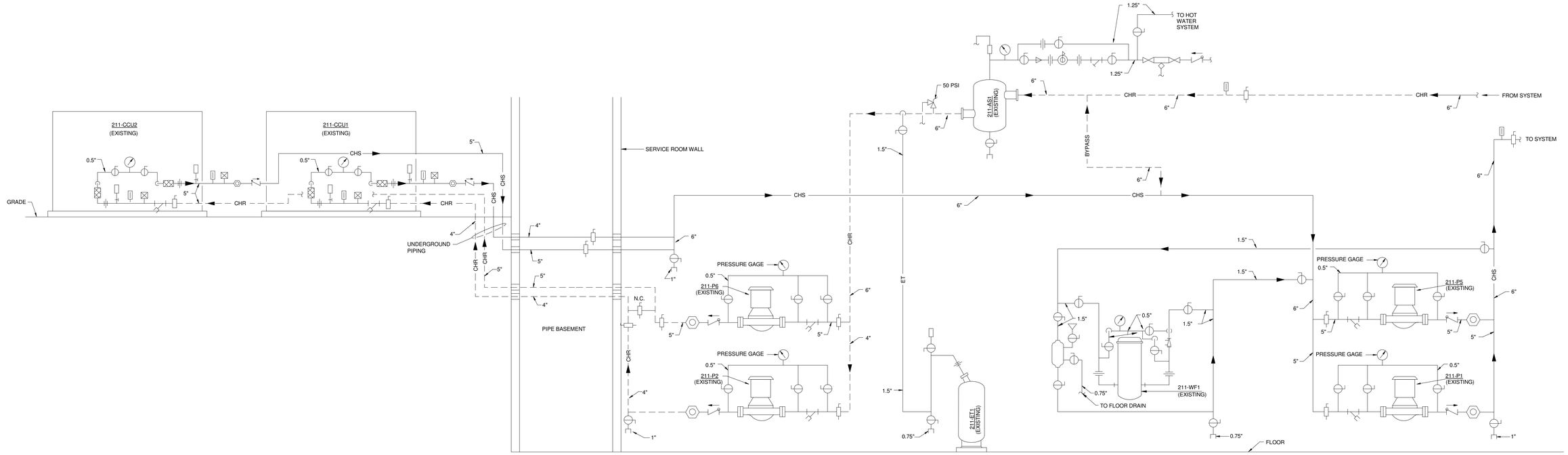

(REFERENCE ONLY)

CHILLED WATER SYSTEM SCHEMATIC

SCALE: NONE

Revisions	Date

CONSULTANTS:

Heapy Engineering
Mechanical Electrical Commissioning Technology
Nationally Recognized Leader in Sustainability / LEED
1400 W Dorothy Lane, Dayton OH 45409-1310
Ph: 937-224-0861 Fax: 937-224-5777 www.heapy.com
PROJECT NO. 2010-04024 FIRM LICENSE NO. 01528

STATE OF OHIO — JOHN A. BLACK 49341 — REGISTERED PROFESSIONAL ENGINEER

ARCHITECT/ENGINEERS:

JOHN POE ARCHITECTS
116 EAST THIRD STREET
DAYTON, OHIO
45402-2130
937 461 3290 PHONE
937 461 0260 FAX
jpa@johnpoe.com

Drawing Title: HOT AND CHILLED WATER SYSTEM SCHEMATICS

Approved: Project Director

Project Title: RENOVATE CLC BUILDING 211 WEST

Location: Chillicothe, Ohio

Date: 09/06/2013 | Checked: JAC | Drawn: TEG

Project No. VA Project No. 538-107 JPA Project No. 11001.00

Building Number: 211

Drawing Number: H9

Dwg. 82 of 132

Office of Construction and Facilities Management
Department of Veterans Affairs

9/6/2013 1:30:47 PM

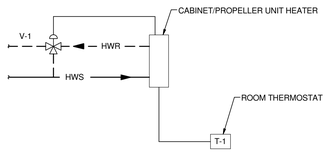

CABINET/PROPELLER UNIT HEATER CONTROL

DDC ROOM THERMOSTAT T-1 SHALL CONTROL FAN MOTOR AND VALVE V-1. ON A DROP IN TEMPERATURE BELOW SETPOINT, THERMOSTAT T-1 SHALL START THE FAN AND HEATING COIL CONTROL VALVE V-1 SHALL MODULATE OPEN TO THE COIL TO MAINTAIN ROOM TEMPERATURE SETPOINT.

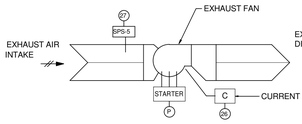

(211-EF9, 10, 11)

GENERAL EXHAUST FANS

1 EXHAUST FAN CONTROLS

1.1 EXHAUST FAN SHALL BE STARTED AND STOPPED BY THE DCP OR REMOTELY AT THE ECC. EACH FAN SHALL BE SOFTWARE INTERLOCKED TO OPERATE WITH ITS RESPECTIVE AIR HANDLING UNIT (211-EF9 WITH 211-AHU8, AND 211-EF11 WITH 211-AHU7). H-O-A SWITCH SHALL BE KEPT IN THE "AUTO" POSITION. "HAND" AND "OFF" SHALL BE USED ONLY FOR MAINTENANCE.

1.2 THE DCP, USING HIGH PRESSURE SENSOR SPS-5 LOCATED AT THE EXHAUST FAN INLET, SHALL PREVENT THE EXHAUST FAN FROM DEVELOPING OVER 2 INCHES OF NEGATIVE STATIC PRESSURE (FIELD ADJUSTABLE). IF STATIC PRESSURE AT SPS-5 EXCEEDS 2 INCHES OF NEGATIVE STATIC PRESSURE, THE FAN SHALL BE SHUT OFF AND AN ALARM SHALL BE SENT TO THE ECC.

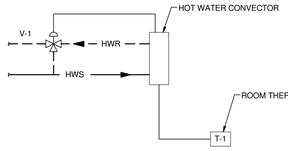

HOT WATER CONVECTOR CONTROL

WHENEVER THE SPACE TEMPERATURE DROPS BELOW SETPOINT, AS SENSED BY DDC ROOM THERMOSTAT T-1, 3-WAY MODULATING CONTROL VALVE V-1 SHALL OPEN TO SATISFY HEATING SETPOINT. INITIAL SETPOINT SHALL BE 68 DEG. F. ALL SETPOINTS SHALL BE FULLY ADJUSTABLE TO MEET JOB CONDITIONS.

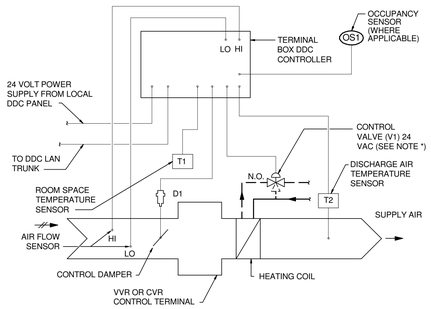

* REFER TO AIR TERMINAL UNIT SCHEDULE ON SHEET H3 FOR VALVE TYPE (2-WAY OR 3-WAY)

CVR AND VVR TERMINAL CONTROLS

GENERAL NOTES

1 A COMPLETE SYSTEM OF AUTOMATIC TEMPERATURE CONTROLS SHALL BE INSTALLED UNDER THIS CONTRACT AS REQUIRED TO ACCOMPLISH THE SEQUENCE OF CONTROL FOR VARIOUS ITEMS OF EQUIPMENT AND SYSTEMS AS DESCRIBED HEREINAFTER. THE SYSTEM SHALL BE A DIRECT DIGITAL CONTROL SYSTEM UTILIZING ELECTRIC ACTUATION.

2 ELECTRICAL WORK INCLUDES A POWER SOURCE TO THE MOTOR STARTERS. ALL HVAC POWER SOURCES REQUIRED BEYOND THESE STARTERS OR BEYOND SOURCES EXPLICITLY SHOWN ON THE ELECTRICAL DRAWINGS, SHALL BE PROVIDED UNDER THE ATC WORK. THIS WORK SHALL INCLUDE BUT NOT BE LIMITED TO WIRING, CONDUIT, TRANSFORMERS, RELAYS AND FUSES.

3 BULB WELLS FOR TEMPERATURE SENSING AS INDICATED SHALL BE FURNISHED UNDER THE ATC WORK AND INSTALLED AS PART OF THE HVAC PIPING WORK. PIPING WORK SHALL INCLUDE PROPERLY SIZED WELDOLET OR THREADOLET FITTINGS PLACED AS DIRECTED BY THE CONTROL SYSTEM SUPPLIER.

4 POINTS LIST IS SHOWN AS AN AID TO THE CONTRACTOR INDICATING THE MINUMUM POINTS REQUIRED FOR CONTROL AND MONITORING. ALL INPUT AND OUTPUT POINTS, AND THEIR REQUIRED INTERFACE AND ACCESSORY HARDWARE, SHALL BE PROVIDED FOR A COMPLETE AND FUNCTIONAL CONTROL SYSTEM. IF OR WHEN ADDITIONAL POINTS ARE REQUIRED TO ACCOMPLISH THE SEQUENCES OF CONTROL SPECIFIED, THESE POINTS, ALONG WITH ADDITIONAL DIRECT DIGITAL CONTROL PANEL(S) (IF REQUIRED), SHALL ALSO BE PROVIDED.

5 DIAGRAMS, SEQUENCES, AND POINTS LIST SHOWN ON THIS SHEET ARE INTENDED TO REPRESENT A SINGLE TYPICAL AIR HANDLING SYSTEM. NOT ALL SYSTEMS HAVE THE SAME QUANTITY OF POINTS. REFER TO FLOOR PLANS FOR MORE INFORMATION.

CVR & VVR CONTROL SEQUENCES WITH OCCUPANCY SENSING

1 CONSTANT VOLUME REHEAT TERMINAL CONTROL

1.1 DURING THE OCCUPIED MODE OF OPERATION, WHEN ROOM TEMPERATURE AT T1 IS BELOW SETPOINT, HOT WATER VALVE V1 SHALL MODULATE OPEN TO COIL TO MAINTAIN TEMPERATURE SETPOINT. BOX DAMPER D1 SHALL REMAIN AT CONSTANT MAXIMUM CFM.

1.2 EACH TERMINAL UNIT SHALL INCLUDE AN AIRFLOW SENSOR FOR CALCULATING CFM, AND A DISCHARGE AIR TEMPERATURE SENSOR.

1.3 EXTEND 24 VOLT POWER TO THE TERMINAL BOX CONTROLLER FROM THE ASSOCIATED AIR HANDLING UNIT DDC CONTROL PANEL.

1.4 ROOM SPACE TEMPERATURE SET POINT SHALL BE ADJUSTABLE FROM THE FRONT END COMPUTER INTERFACE.

1.5 OCCUPANCY SENSOR OS1 PROVIDED UNDER DIV. 26 SHALL DETERMINE OCCUPIED/UNOCCUPIED MODES OF OPERATION. TO INVOKE UNOCCUPIED SEQUENCE (1.7 BELOW), OCCUPANCY SENSORS FOR ALL SPACES ON A GIVEN TERMINAL UNIT ZONE MUST SATISFY THIS CONDITION. EXTEND LOW VOLTAGE WIRING FROM ALL APPLICABLE OCCUPANCY SENSOR(S) TO THE TERMINAL UNIT CONTROLLER.

1.6 DURING THE UNOCCUPIED MODE OF OPERATION, THE CONTROL DAMPER ACTUATOR D1 SHALL POSITION TO THE UNOCCUPIED AIRFLOW SETTING (REFER TO AIR TERMINAL UNIT SCHEDULE, SHEET H3).

1.7 DURING THE UNOCCUPIED MODE OF OPERATION, WHEN THE ROOM TEMPERATURE AT T1 IS BELOW THE UNOCCUPIED HEATING SETPOINT (REFER TO HVAC DESIGN DATA SCHEDULE, SHEET H2), THE CONTROL SHALL INDEX TO THE OCCUPIED HEATING MODE OF OPERATION. THE CONTROL SHALL REVERT TO UNOCCUPIED OPERATION (SEE 1.6 ABOVE) WHEN ROOM TEMPERATURE T1 RISES 2 DEGREES (ADJUSTABLE) ABOVE THE UNOCCUPIED HEATING SETPOINT.

1.8 DURING THE UNOCCUPIED MODE OF OPERATION, WHEN THE ROOM TEMPERATURE AT T1 IS ABOVE THE UNOCCUPIED COOLING SETPOINT (REFER TO HVAC DESIGN DATA SCHEDULE, SHEET H2), THE CONTROL SHALL INDEX TO THE OCCUPIED COOLING MODE OF OPERATION. THE CONTROL SHALL REVERT TO UNOCCUPIED OPERATION (SEE 1.6 ABOVE) WHEN ROOM TEMPERATURE T1 REDUCES 2 DEGREES (ADJUSTABLE) BELOW THE UNOCCUPIED COOLING SETPOINT.

2 VARIABLE VOLUME REHEAT TERMINAL CONTROL

2.1 DURING THE OCCUPIED MODE OF OPERATION, WHEN ROOM TEMPERATURE AT T1 IS BELOW SETPOINT, THE CONTROL DAMPER ACTUATOR, D1 SHALL MODULATE THE DAMPER TO REDUCE AIRFLOW TO THE SUMMER MINIMUM SETTING. ON A FURTHER DROP IN ROOM TEMPERATURE AT T1, THE CONTROL DAMPER SHALL BE MODULATED UPWARD TO THE WINTER MINIMUM AIRFLOW AND THE HOT WATER VALVE V1 SHALL MODULATE OPEN TO COIL TO MAINTAIN TEMPERATURE SETPOINT.

2.2 DURING THE OCCUPIED MODE OF OPERATION, AS ROOM TEMPERATURE RISES ABOVE SETPOINT, HOT WATER VALVE V1 SHALL CLOSE. IF THE ROOM TEMPERATURE CONTINUES TO RISE ABOVE SETPOINT, DAMPER D1 SHALL MODULATE FROM SUMMER (COOLING) MINIMUM AIRFLOW TO MAXIMUM AIRFLOW TO MAINTAIN ROOM TEMPERATURE.

2.3 EACH TERMINAL UNIT SHALL INCLUDE AN AIRFLOW SENSOR FOR CALCULATING CFM, AND A DISCHARGE AIR TEMPERATURE SENSOR

2.4 EXTEND 24 VOLT POWER TO THE TERMINAL BOX CONTROLLER FROM THE ASSOCIATED AIR HANDLING UNIT DDC CONTROL PANEL.

2.5 ROOM SPACE TEMPERATURE SET POINT SHALL BE ADJUSTABLE FROM THE FRONT END COMPUTER INTERFACE.

2.6 OCCUPANCY SENSOR OS1 PROVIDED UNDER DIV. 26 SHALL DETERMINE OCCUPIED/UNOCCUPIED MODES OF OPERATION. TO INVOKE UNOCCUPIED SEQUENCE (2.7 BELOW), OCCUPANCY SENSORS FOR ALL SPACES ON A GIVEN TERMINAL UNIT ZONE MUST SATISFY THIS CONDITION. EXTEND LOW VOLTAGE WIRING FROM ALL APPLICABLE OCCUPANCY SENSOR(S) TO THE TERMINAL BOX CONTROLLER.

2.7 DURING THE UNOCCUPIED MODE OF OPERATION, THE CONTROL DAMPER ACTUATOR D1 SHALL POSITION TO THE UNOCCUPIED AIRFLOW SETTING (REFER TO AIR TERMINAL UNIT SCHEDULE, SHEET H3).

2.8 DURING THE UNOCCUPIED MODE OF OPERATION, WHEN THE ROOM TEMPERATURE AT T1 IS BELOW THE UNOCCUPIED HEATING SETPOINT (REFER TO HVAC DESIGN DATA SCHEDULE, SHEET H2), THE CONTROL SHALL INDEX TO THE OCCUPIED HEATING MODE OF OPERATION. THE CONTROL SHALL REVERT TO UNOCCUPIED OPERATION (SEE 2.6 ABOVE) WHEN ROOM TEMPERATURE T1 RISES 2 DEGREES (ADJUSTABLE) ABOVE THE UNOCCUPIED HEATING SETPOINT.

2.9 DURING THE UNOCCUPIED MODE OF OPERATION, WHEN THE ROOM TEMPERATURE AT T1 IS ABOVE THE UNOCCUPIED COOLING SETPOINT (REFER TO HVAC DESIGN DATA SCHEDULE, SHEET H2), THE CONTROL SHALL INDEX TO THE OCCUPIED COOLING MODE OF OPERATION. THE CONTROL SHALL REVERT TO UNOCCUPIED OPERATION (SEE 2.6 ABOVE) WHEN ROOM TEMPERATURE T1 REDUCES 2 DEGREES (ADJUSTABLE) BELOW THE UNOCCUPIED COOLING SETPOINT.

CVR & VVR CONTROL SEQUENCES WITHOUT OCCUPANCY SENSING

1 CONSTANT VOLUME REHEAT TERMINAL CONTROL

1.1 WHEN ROOM TEMPERATURE AT T-1 IS BELOW SETPOINT, HOT WATER VALVE V-1 SHALL MODULATE OPEN TO COIL TO MAINTAIN TEMPERATURE SETPOINT. BOX DAMPER D-1 SHALL REMAIN AT CONSTANT MAXIMUM CFM.

1.2 EACH TERMINAL UNIT SHALL INCLUDE AN AIRFLOW SENSOR FOR CALCULATING CFM, AND A DISCHARGE AIR TEMPERATURE SENSOR.

1.3 EXTEND 24 VOLT POWER TO THE TERMINAL BOX CONTROLLER FROM THE ASSOCIATED AIR HANDLING UNIT DDC CONTROL PANEL.

1.4 ROOM SPACE TEMPERATURE SET POINT SHALL BE ADJUSTABLE FROM THE FRONT END COMPUTER INTERFACE.

1.5 COORDINATE AND ADJUST OCCUPANCY SCHEDULES AND TEMPERATURE RANGE WITH COTR.

2 VARIABLE VOLUME REHEAT TERMINAL CONTROL

2.1 WHEN ROOM TEMPERATURE AT T-1 IS BELOW SETPOINT, THE CONTROL DAMPER ACTUATOR D-1 SHALL MODULATE THE DAMPER TO REDUCE AIRFLOW TO THE SUMMER MINIMUM SETTING. ON A FURTHER DROP IN ROOM TEMPERATURE AT T-1, THE CONTROL DAMPER SHALL BE MODULATED UPWARD TO THE WINTER MINIMUM AIRFLOW AND THE HOT WATER VALVE V-1 SHALL MODULATE OPEN TO COIL TO MAINTAIN TEMPERATURE SETPOINT.

2.2 AS ROOM TEMPERATURE RISES ABOVE SETPOINT, HOT WATER VALVE V-1 SHALL CLOSE. IF THE ROOM TEMPERATURE CONTINUES TO RISE ABOVE SETPOINT, DAMPER D-1 SHALL MODULATE FROM SUMMER (COOLING) MINIMUM AIRFLOW TO MAXIMUM AIRFLOW TO MAINTAIN ROOM TEMPERATURE.

2.3 EACH TERMINAL UNIT SHALL INCLUDE AN AIRFLOW SENSOR FOR CALCULATING CFM, AND A DISCHARGE AIR TEMPERATURE SENSOR.

2.4 EXTEND 24 VOLT POWER TO THE TERMINAL BOX CONTROLLER FROM THE ASSOCIATED AIR HANDLING UNIT DDC CONTROL PANEL.

2.5 ROOM SPACE TEMPERATURE SET POINT SHALL BE ADJUSTABLE FROM THE FRONT END COMPUTER INTERFACE.

2.6 COORDINATE AND ADJUST OCCUPANCY SCHEDULES AND TEMPERATURE RANGE WITH COTR.

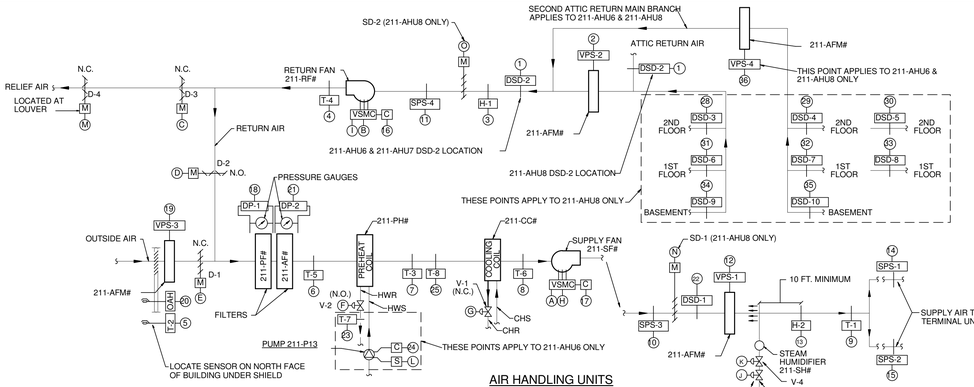

AIR HANDLING UNITS 211-AHU6, 7, & 8

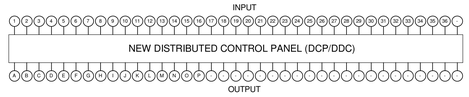

ATTIC CONTROL PANELS 211-AHU6, 7, & 8

LEGEND (APPLIES TO AIR HANDLING UNITS 211-AHU6, 7, & 8)

AFM	AIR FLOW MEASURING DEVICE	MONITORS AIR FLOW RATE AND PROVIDES VELOCITY PRESSURE FOR TRANSMITTAL TO DCP
C	CURRENT SENSING RELAY	TRANSMITS MOTOR CURRENT TO DCP TO INDICATE STATUS OF FANS.
DP-1 DP-2	DIFFERENTIAL PRESSURE SENSOR	TRANSMITS DIFFERENTIAL PRESSURE TO DCP TO INDICATE FILTER CONDITION
DCP	DIRECT DIGITAL CONTROL PANEL	CONTROLS OPERATION OF AIR HANDLING UNIT IN ACCORDANCE WITH THE SEQUENCE OF OPERATION
D-1	MODULATING OUTSIDE AIR DAMPER	PROPORTIONS FLOW OF OUTSIDE AIR IN RESPONSE TO DCP AND CLOSES WHEN SUPPLY FAN STOPS
D-2	MODULATING RETURN AIR DAMPER	PROPORTIONS FLOW OF RETURN AIR IN RESPONSE TO DCP AND OPENS WHEN SUPPLY FAN STOPS
D-3	MODULATING RELIEF AIR DAMPER	PROPORTIONS FLOW OF RELIEF AIR IN RESPONSE TO DCP AND CLOSES WHEN SUPPLY FAN STOPS
D-4	TWO POSITION RELIEF AIR DAMPER	CLOSES WHEN THE UNIT IS OFF
SD-1	SUPPLY DUCT ISOLATION SMOKE DAMPER	CLOSES WHEN THE UNIT IS OFF
SD-2	RETURN DUCT ISOLATION SMOKE DAMPER	CLOSES WHEN THE UNIT IS OFF
DSD	DUCT SMOKE DETECTORS (FURNISHED AND WIRED TO FIRE ALARM PANEL BY ELECTRICAL)	PROVIDE SMOKE SIGNAL TO DCP
ECC	ENGINEERING CONTROL CENTER	LOCATED IN ENGINEERING BUILDING FOR MONITORING OF SYSTEM OPERATIONS
H-1	RETURN AIR HUMIDITY SENSOR	SENSES AND TRANSMITS RETURN AIR HUMIDITY TO DCP FOR CONTROL AND INDICATION
H-2	SUPPLY AIR HUMIDITY SENSOR	SENSES AND TRANSMITS SUPPLY AIR HUMIDITY TO DCP FOR CONTROL AND INDICATION
SPS-1 SPS-2	SUPPLY DUCT STATIC PRESSURE SENSOR	SENSES AND TRANSMITS DUCT STATIC PRESSURE TO DCP FOR CONTROL AND INDICATION
SPS-3	SUPPLY DUCT HIGH LIMIT STATIC PRESSURE SENSOR	SENSES AND TRANSMITS DUCT STATIC PRESSURE NEAR SUPPLY FAN TO DCP
SPS-4	RETURN DUCT HIGH LIMIT STATIC PRESSURE SENSOR	SENSES AND TRANSMITS DUCT STATIC PRESSURE NEAR RETURN FAN TO DCP
T-1	SUPPLY AIR TEMPERATURE SENSOR	SENSES AND TRANSMITS SUPPLY AIR DRY BULB TEMPERATURE TO DCP FOR CONTROL AND INDICATION
T-2	OUTSIDE AIR TEMPERATURE SENSOR	SENSES AND TRANSMITS OUTSIDE AIR DRY BULB TEMPERATURE TO DCP FOR CONTROL AND INDICATION
T-3	PREHEAT COIL LEAVING AIR TEMPERATURE SENSOR	SENSES AND TRANSMITS PREHEAT AIR DRY BULB TEMPERATURE TO DCP FOR CONTROL AND INDICATION
T-4	RETURN AIR TEMPERATURE SENSOR	SENSES AND TRANSMITS RETURN AIR DRY BULB TEMPERATURE TO DCP FOR INDICATION ONLY
T-5	MIXED AIR TEMPERATURE SENSOR	SENSES AND TRANSMITS MIXED AIR DRY BULB TEMPERATURE TO DCP FOR CONTROL AND INDICATION
T-6	COOLING COIL LEAVING AIR TEMPERTURE	SENSES AND TRANSMITS COOLING COIL DISCHARGE AIR TEMPERATURE TO DCP FOR INDICATION ONLY
T-7	PREHEAT COIL LEAVING WATER TEMPERATURE SENSOR	SENSES AND TRANSMITS PREHEAT COIL LEAVING WATER TEMPERATURE TO DCP FOR CONTROL AND INDICATION
T-8	FREEZESTAT	SHUTS DOWN SUPPLY FAN UPON SENSING FREEZE CONDITION.
V-1	MODULATING CHILLED WATER CONTROL VALVE	PROPORTIONS FLOW OF CHILLED WATER TO COOLING COIL IN RESPONSE TO DCP
V-2	MODULATING HOT WATER CONTROL VALVE	PROPORTIONS FLOW OF HOT WATER TO PREHEAT COIL IN RESPONSE TO DCP
V-3	TWO-POSITION ISOLATION STEAM CONTROL VALVE	CONTROLS STEAM FLOW TO HUMIDIFIER
V-4	MODULATING STEAM CONTROL VALVE	PROPORTIONS FLOW OF STEAM TO HUMIDIFIER IN RESPONSE TO DCP
VPS	VELOCITY PRESSURE SENSOR	SENSES AND TRANSMITS VELOCITY PRESSURE TO DCP
VSMC	VARIABLE SPEED MOTOR CONTROLLER WITH MOTOR STARTER	CONTROLS SUPPLY AND RETURN FAN MOTOR SPEEDS IN RESPONSE TO DCP
OAH	OUTSIDE AIR HUMIDITY SENSOR	SENSES AND TRANSMITS OUTSIDE AIR ENTHALPY TO DCP FOR CONTROL AND INDICATION.

ATTIC CONTROL PANELS 211-AHU6, 7, 8 POINTS LIST

POINT ID	DEVICE TAG	DEVICE DESCRIPTION		POINT TYPE DI	DO	AI	AO
1	DSD-2	RETURN AIR DUCT SMOKE DETECTOR (FIRE SYSTEM SHUTDOWN)		X			
2	VPS-2	RETURN AIR FLOW MEASURING STATION				X	
3	H-1	RETURN AIR HUMIDITY SENSOR				X	
4	T-4	RETURN AIR TEMPERATURE SENSOR				X	
5	T-2	OUTSIDE AIR TEMPERATURE SENSOR (GLOBAL POINT)				X	
6	T-5	MIXED AIR TEMPERATURE SENSOR				X	
7	T-3	PREHEAT COIL LEAVING AIR TEMPERATURE SENSOR				X	
8	T-6	COOLING COIL LEAVING AIR TEMPERATURE SENSOR				X	
9	T-1	SUPPLY AIR TEMPERATURE SENSOR				X	
10	SPS-3	SUPPLY DUCT HIGH STATIC SAFETY		X			
11	SPS-4	RETURN DUCT HIGH STATIC SAFETY		X			
12	VPS-1	SUPPLY AIR FLOW MEASURING STATION				X	
13	H-2	SUPPLY AIR HUMIDITY SENSOR (HIGH LIMIT)				X	
14	SPS-1	SUPPLY AIR STATIC PRESSURE SENSOR				X	
15	SPS-2	SUPPLY AIR STATIC PRESSURE SENSOR				X	
16	C	RETURN FAN STATUS CURRENT SWITCH		X			
17	C	SUPPLY FAN STATUS CURRENT SWITCH		X			
18	DP-1	PRE FILTER PRESSURE DROP				X	
19	VPS-3	OUTSIDE AIR FLOW MEASURING STATION				X	
20	OAH	OUTSIDE AIR HUMIDITY (GLOBAL POINT)				X	
21	DP-2	AFTER FILTER PRESSURE DROP				X	
22	DSD-1	SUPPLY AIR DUCT SMOKE DETECTOR (FIRE SYSTEM SHUTDOWN)		X			
23	T-7	PREHEAT COIL 211-PH# LEAVING WATER TEMPERATURE SENSOR	211-AHU6 ONLY			X	
24	C	PREHEAT COIL PUMP 211-P13 STATUS CURRENT SWITCH	211-AHU6 ONLY	X			
25	T-8	FREEZESTAT		X			
26	C	EXHAUST FAN 211-EF# STATUS CURRENT SWITCH		X			
27	SPS-5	EXHAUST FAN 211-EF# EXHAUST DUCT HIGH STATIC SAFETY		X			
28	DSD-3	RETURN AIR DUCT SMOKE DETECTOR (FIRE SYSTEM SHUTDOWN)	211-AHU8 ONLY	X			
29	DSD-4	RETURN AIR DUCT SMOKE DETECTOR (FIRE SYSTEM SHUTDOWN)	211-AHU8 ONLY	X			
30	DSD-5	RETURN AIR DUCT SMOKE DETECTOR (FIRE SYSTEM SHUTDOWN)	211-AHU8 ONLY	X			
31	DSD-6	RETURN AIR DUCT SMOKE DETECTOR (FIRE SYSTEM SHUTDOWN)	211-AHU8 ONLY	X			
32	DSD-7	RETURN AIR DUCT SMOKE DETECTOR (FIRE SYSTEM SHUTDOWN)	211-AHU8 ONLY	X			
33	DSD-8	RETURN AIR DUCT SMOKE DETECTOR (FIRE SYSTEM SHUTDOWN)	211-AHU8 ONLY	X			
34	DSD-9	RETURN AIR DUCT SMOKE DETECTOR (FIRE SYSTEM SHUTDOWN)	211-AHU8 ONLY	X			
35	DSD-10	RETURN AIR DUCT SMOKE DETECTOR (FIRE SYSTEM SHUTDOWN)	211-AHU8 ONLY	X			
36	VPS-4	RETURN AIR FLOW MEASURING STATION	211-AHU6 & 211-AHU8 ONLY			X	
A	VSMC	SUPPLY FAN START-STOP			X		
B	VSMC	RETURN FAN START-STOP			X		
C	D-3	MODULATING RELIEF AIR DAMPER					X
D	D-2	MODULATING RETURN AIR DAMPER					X
E	D-1	MODULATING OUTSIDE AIR DAMPER					X
F	V-2	MODULATING PREHEAT COIL VALVE					X
G	V-1	MODULATING COOLING COIL VALVE					X
H	VSMC	SUPPLY FAN VARIABLE SPEED MOTOR CONTROLLER					X
I	VSMC	RETURN FAN VARIABLE SPEED MOTOR CONTROLLER					X
J	V-3	TWO POSITION ISOLATION STEAM HUMIDIFIER VALVE			X		
K	V-4	MODULATING STEAM HUMIDIFIER VALVE					X
L	S	PREHEAT COIL PUMP 211-P13 START-STOP	211-AHU6 ONLY		X		
M	D-4	TWO-POSITION RELIEF AIR DAMPER			X		
N	SD-1	SUPPLY DUCT ISOLATION SMOKE DAMPER	211-AHU8 ONLY		X		
O	SD-2	RETURN DUCT ISOLATION SMOKE DAMPER	211-AHU8 ONLY		X		
P	S	EXHAUST FAN 211-EF# START-STOP			X		

NOTE: DDC ZONE CONTROL IS SPECIFIED. PROVIDE ZONE TEMPERATURE SENSOR AND MODULATING OUTPUT FOR EACH ZONE, AS SHOWN IN VVR AND CVR CONTROL TERMINAL DIAGRAM ON THIS SHEET.

FULLY SPRINKLERED

SEQUENCE OF OPERATION FOR 211-AHU6, 7, & 8

1. GENERAL

1.1 UNIT IS NORMALLY STARTED AND STOPPED BY THE DCP OR REMOTELY AT THE ECC. H-O-A SWITCH SHALL BE KEPT IN THE "AUTO" POSITION. "HAND" AND "OFF" POSITIONS SHALL BE USED ONLY FOR MAINTENANCE.

1.2 WHEN THE UNIT IS "OFF", FOR ANY REASON, OUTSIDE AIR DAMPER D-1, RELIEF AIR DAMPERS D-3 AND D-4, AND ISOLATION SUPPLY AND RETURN AIR SMOKE DAMPERS SD-1 AND SD-2 SHALL BE FULLY CLOSED, RETURN AIR DAMPER D-2 SHALL BE FULLY OPEN, AND SUPPLY AND RETURN FANS SHALL BE OFF.

1.3 WHEN THE UNIT IS "ON", ISOLATION SMOKE DAMPERS SD-1 AND SD-2 AND RELIEF DAMPER D-4 SHALL OPEN, AND ONCE PROVED OPEN, SUPPLY AND RETURN FANS SHALL START, AND D-1, D-2 AND D-3 SHALL MODULATE IN ACCORDANCE WITH THE FOLLOWING SEQUENCE.

2. TEMPERATURE CONTROL

2.1 SUPPLY AIR TEMPERATURE, SENSED BY T-1, SHALL BE MAINTAINED AT SETPOINT OF 54.5 DEG. F. VIA DCP BY MODULATING COOLING COIL VALVE V-1 OR ECONOMIZER DAMPERS D-1, D-2 AND D-3 OR PREHEAT COIL VALVE V-2, IN SEQUENCE. SEPARATE CONTROL LOOPS SHALL BE UTILIZED FOR ECONOMIZER COOLING, MECHANICAL COOLING, AND HEATING FUNCTION.

2.2 HOT WATER PREHEAT COIL RUNAROUND PUMP 211-P13 SHALL START AND RUN CONTINUOUSLY BELOW 45 DEG. F OUTSIDE AIR TEMPERATURE (ADJUSTABLE). WHEN THE AIR HANDLING UNIT IS OFF UNDER NORMAL OPERATION, AND THE OUTSIDE AIR TEMPERATURE IS BELOW 40 DEG. F. V-2 SHALL MODULATE TO MAINTAIN COIL LEAVING WATER TEMPERATURE AS SENSED BY T-7 AT 70 DEG. F. IF THE UNIT SHUTS DOWN ON ALARM, V-2 SHALL GO FULL OPEN TO THE COIL. COOLING COIL VALVE V-1 SHALL BE FULLY CLOSED BEFORE V-2 OPENS.

3. ENTHALPY ECONOMIZER CONTROL

3.1 OUTSIDE AIR TEMPERATURE AND HUMIDITY, AND RETURN AIR TEMPERATURE AND HUMIDITY SHALL BE MEASURED, AND THE ENTHALPY OF EACH DETERMINED. IF THE ENTHALPY OF THE OUTSIDE AIR IS LESS THAN THE ENTHALPY OF THE RETURN AIR, THE ECONOMIZER SHALL BE ENABLED. WHEN THE OUTSIDE AIR ENTHALPY IS HIGHER THAN THE RETURN AIR ENTHALPY AND MECHANICAL COOLING IS AVAILABLE, THE ECONOMIZER SHALL BE DISABLED.

4. ECONOMIZER CYCLE

4.1 WHEN THE UNIT OPERATES IN THE OCCUPIED MODE, MINIMUM OUTSIDE AIR SHALL BE PROVIDED BY OPENING AND MODULATING OUTSIDE AIR DAMPERS D-1 IN RESPONSE TO AIR FLOW CONTROL DESCRIBED IN PARAGRAPH 5.2 TO SUPPLY MINIMUM OUTSIDE AIR. THE RETURN AIR DAMPERS D-2 SHALL OPEN FULL AND RELIEF AIR DAMPERS D-3 SHALL REMAIN CLOSED. THIS CONDITION IS THE NORMAL POSITION AND SHALL BE MAINTAINED DURING THE OCCUPIED MODE EXCEPT DURING THE "ECONOMIZER" CYCLE. DURING THE "ECONOMIZER" CYCLE, THE AMOUNT OF OUTSIDE AIR AND RELIEF AIR SHALL BE INCREASED AS REQUIRED TO MAINTAIN THE UNIT DISCHARGE AIR TEMPERATURE SETPOINT, AS SENSED BY T-1. PROVIDE A MIXED AIR SENSOR AND LOW LIMIT CONTROL (T-5) SET AT 50 DEGREES F. TO PREVENT OVER-OPENING OF THE ECONOMIZER OUTSIDE AIR DAMPERS. ALL CONTROL SETPOINTS SHALL BE FULLY ADJUSTABLE TO MEET JOB CONDITIONS.

5. AIR FLOW CONTROL

5.1 THE SUPPLY AIR FLOW SHALL BE CONTROLLED BY THE DCP MODULATING THE SUPPLY FAN VARIABLE SPEED MOTOR CONTROLLER (VSMC) TO MAINTAIN 1.0" OF DUCT STATIC PRESSURE (FIELD ADJUSTABLE), SENSED BY SPS-1 AND SPS-2 LOCATED 2/3 DISTANCE DOWN THE SUPPLY DUCTS.

5.2 THE DCP, USING TOTAL SUPPLY AIR FLOW SIGNAL (VPS-1), SHALL RESET THE RETURN AIR FAN VARIABLE SPEED MOTOR CONTROLLER (VSMC) USING RETURN AIR FLOW SIGNAL (VPS-2) TO MAINTAIN A CONSTANT AIR FLOW DIFFERENCE BETWEEN THE SUPPLY AIR AND THE RETURN AIR EQUAL TO THE FOLLOWING: 1,945 CFM FOR 211-AHU6, 410 CFM FOR 211-AHU7, AND 5,585 CFM FOR 211-AHU8 (IF DEDUCT ALTERNATE TO DELETE BASEMENT SCOPE IS ACCEPTED, 211-AHU8 AIR FLOW DIFFERENCE BETWEEN SUPPLY AND RETURN FAN SHALL BE 4,890 CFM).

5.3 VARIABLE SPEED MOTOR CONTROLLERS SHALL RESPOND TO START/STOP COMMANDS AND ALL SAFETIES (FREEZE, SMOKE, ETC.) WHETHER IN THE HAND, AUTOMATIC OR BYPASS MODES.

5.4 THE DCP, USING HIGH PRESSURE SENSOR SPS-3 LOCATED AT THE SUPPLY FAN DISCHARGE, SHALL PREVENT THE SUPPLY FAN FROM DEVELOPING OVER 4 INCHES OF POSITIVE STATIC PRESSURE (FIELD ADJUSTABLE). IF STATIC PRESSURE AT SPS-3 EXCEEDS 4 INCHES OF POSITIVE PRESSURE, THE SUPPLY AND RETURN FANS SHALL STOP.

5.5 THE DCP, USING HIGH PRESSURE SENSOR SPS-4 LOCATED AT THE RETURN FAN INLET, SHALL PREVENT THE RETURN FAN FROM DEVELOPING OVER 2 INCHES OF NEGATIVE STATIC PRESSURE (FIELD ADJUSTABLE). IF STATIC PRESSURE AT SPS-4 EXCEEDS 2 INCHES OF NEGATIVE PRESSURE, THE SUPPLY AND RETURN FANS SHALL STOP.

6. HUMIDITY CONTROL

6.1 SYSTEM INCLUDES A STE

FULLY SPRINKLERED

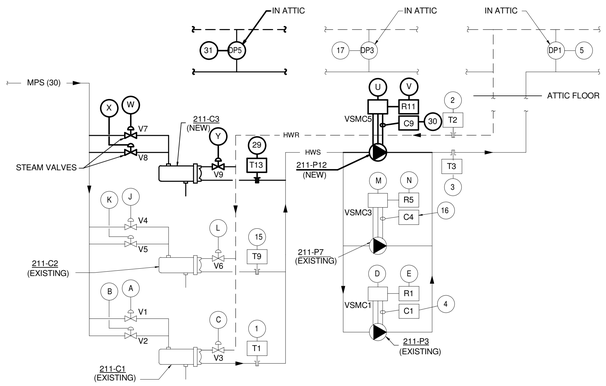

HOT WATER CONVERTORS AND CIRCULATING PUMPS

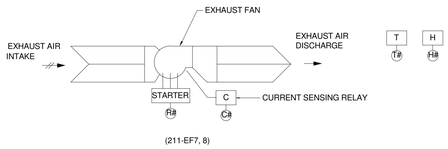

SERVICE ROOM PROPELLER EXHAUST FAN

(FOR REFERENCE ONLY)

CHILLED WATER SYSTEM CONTROL SEQUENCE

1 GENERAL

1.1 TWO AIR-COOLED CHILLERS AND ASSOCIATED PRIMARY AND SECONDARY PUMPS ARE EXISTING TO REMAIN. EXISTING SEQUENCES SHALL BE MODIFIED TO BE AS SHOWN BELOW. LIGHT LINEWEIGHT INDICATES EXISTING EQUIPMENT/SEQUENCES, HEAVIER LINEWEIGHT INDICATES NEW WORK.

1.1 SEQUENCE SHALL HAVE THE ABILITY TO BE INITIATED BY THE DCP OR REMOTELY AT THE ECC. EACH CHILLER AND ASSOCIATED PUMPS ARE SIZED FOR APPROXIMATELY 50% OF THE REQUIRED LOAD.

1.2 CHILLED WATER SYSTEM SHALL BE ENABLED IF OUTSIDE AIR TEMPERATURE IS AT OR ABOVE 55 DEG. F AND UPON REQUIREMENT FOR MECHANICAL COOLING BY ANY OF THE AIR HANDLING UNITS.

1.3 A FLOW SWITCH SHALL BE PROVIDED FOR EACH CHILLER TO PROVE FLOW BEFORE THE COMPRESSOR OPERATES. FURNISH ALL NECESSARY FLOW SWITCHES, AUXILARY CONTACTS, EXTERNAL RELAYS AND ALL WIRING TO ACCOMPLISH THE DESCRIBED START-UP, OPERATING AND SAFETY SEQUENCES DESCRIBED. THE CHILLER TEMPERATURE CONTROLLERS ARE FURNISHED WITH THE CHILLERS. ALL CHILLER CONTROL DEVICE INSTALLATION AND SET-UP SHALL BE PROVIDED AS PART OF THE CONTROL WORK.

1.4 WHEN THE CHILLER AND PUMP ARE STOPPED, THE CHILLER SHALL STOP FIRST, THEN AFTER A 5 MINUTE TIME DELAY (ADJUSTABLE), THE ASSOCIATED PRIMARY PUMP SHALL STOP.

2 LEAD/LAG CHILLER SEQUENCEING

2.1 CHILLERS AND PRIMARY CHILLED WATER PUMPS SHALL BE CONTROLLED BY A SEQUENCING CONTROL WITH A TEMPERATURE SENSOR IN THE COMMON PRIMARY RETURN & SUPPLY HEADER AND IN THE SECONDARY SUPPLY HEADER. THE LEAVING WATER TEMPERATURE SHALL BE ATTAINED BY STARTING AND STOPPING CHILLERS. SET THE CONTROLLER ON EACH CHILLER ONE DEGREE LOWER THAN THE SECONDARY CHILLED WATER SET POINT.

2.2 LEAD CHILLER & PRIMARY PUMP SHALL START AND RUN CONTINUOUSLY AND SECONDARY PUMP CONTROL SHALL BE ENABLED UNTIL THE LEAD CHILLER STOP CONDITIONS ARE SATISFIED. AFTER 30 MINUTES, IF THE SECONDARY SUPPLY WATER TEMPERATURE CANNOT BE MAINTAINED BELOW 46 DEG. F., THE LAG CHILLER AND LAG PRIMARY PUMP SHALL START. LAG CHILLER AND LAG PRIMARY PUMP SHALL STOP WHEN THE TEMPERATURE DIFFERENCE BETWEEN PRIMARY SUPPLY AND RETURN IS LESS THAN 5 DEG. F.

2.3 WHEN STOPPING THE LEAD OR LAG CHILLER, THE CHILLER SHALL STOP FIRST, THEN AFTER A 5 MINUTE TIME DELAY, STOP THE RESPECTIVE CHILLED WATER PUMP. PROVIDE A 10 MINUTE RESTART TIME DELAY TO ALLOW CONDITIONS TO STABILIZE BEFORE RESTART OF THE LAG CHILLER. A SEQUENCE PROGRAM SHALL PERMIT REVERSING THE LEAD AND LAG CHILLERS AND PUMPS.

3 SECONDARY CHILLED WATER PUMP

3.1 MODULATE VARIABLE FREQUENCY DRIVES ASSOCIATED WITH EACH SECONDARY CHILLED WATER PUMP TO MAINTAIN THE DIFFERENTIAL WATER PRESSURE AT SET POINT AS DETECTED BY EXISTING DIFFERENTIAL PRESSURE SENSORS DP2 & DP4, AND NEW SENSOR DP6 IN ATTIC (REFER TO PLANS FOR LOCATION). CONTROLLER(S) SHALL ENSURE ALL THREE SENSORS ARE SATISFIED AT ALL TIMES.

3.2 THE LEAD SECONDARY CHILLED WATER PUMP SHALL RUN CONTINUOUSLY IN CONJUNCTION WITH THE LEAD CHILLER. START LAG SECONDARY CHILLED WATER PUMP WHEN THE LEAD PUMP REACHES 80% SPEED AND UPON FAILURE OF THE LEAD PUMP.

3.3 ALL PUMPS SHALL BE SHUT DOWN IF OUTSIDE AIR TEMPERATURE IS AT OR BELOW 50 DEG. F.

4 ALARMS & SAFETIES

4.1 IF THE CHILLER IS COMMANDED ON AND FLOW STOPS, AN ALARM SHALL BE GENERATED BY THE DDC SYSTEM.

4.2 WHEN A CHILLED WATER SYSTEM PUMP IS ENABLED AND STATUS IS NOT PROVEN FOR ADJUSTABLE TIME DELAY (30 SEC.) OR WHEN PUMP IS NOT ENABLED AND STATUS IS PROVEN, AN ALARM SHALL BE GENERATED AT THE DDC.

HOT WATER CONVERTER AND PUMP CONTROL SEQUENCE

1 GENERAL

1.1 TWO STEAM TO HOT WATER CONVERTERS AND ASSOCIATED HEATING HOT WATER PUMPS ARE EXISTING. ONE ADDITIONAL CONVERTER AND PUMP IS BEING ADDED UNDER THIS PROJECT. EXISTING SEQUENCES SHALL BE MODIFIED TO BE AS SHOWN BELOW. LIGHT LINEWEIGHT INDICATES EXISTING EQUIPMENT/SEQUENCES, HEAVIER LINEWEIGHT INDICATES NEW WORK.

1.2 SEQUENCE SHALL HAVE THE ABILITY TO BE INITIATED BY THE DCP OR REMOTELY AT THE ECC. EACH CONVERTER AND PUMP IS SIZED FOR 50% OF THE TOTAL BUILDING LOAD.

2 HOT WATER CIRCULATING PUMPS

2.1 CONVERTERS AND PUMPS SHALL OPERATE IN A LEAD-LAG-STANDBY ARRANGEMENT. THE LEAD HOT WATER PUMP 211-P3 SHALL RUN CONTINUOUSLY IN CONJUNCTION WITH LEAD HOT WATER CONVERTER 211-C1 AND THE LAG HOT WATER PUMP 211-P7 WITH CONVERTER 211-C2 TO PROVIDE YEAR-ROUND HOT WATER FOR SPACE TEMPERATURE CONTROL. STANDBY HOT WATER PUMP 211-P12 AND STANDBY CONVERTER 211-C3 SHALL REMAIN OFF. START LAG PUMP 211-P7 UPON FAILURE OF LEAD PUMP, AND STANDBY PUMP 211-P12 UPON FAILURE OF LAG PUMP. A SEQUENCE PROGRAM SHALL ROTATE THE LEAD, LAG AND STANDBY CONVERTERS AND PUMPS ON A MONTHLY BASIS.

2.2 EACH PUMP SHALL INCLUDE A CURRENT SENSING RELAY TO INDICATE PUMP STATUS.

2.3 PROVIDE AN ADDITIONAL DIFFERENTIAL PRESSURE SENSOR (DP5) IN ADDITION TO EXISTING SENSORS (DP1 & DP3). LOCATE BETWEEN HOT WATER SUPPLY AND RETURN PIPES NEAR 211-AHU8 (SEE ATTIC NEW WORK FLOOR PLAN). MODULATE THE HOT WATER PUMP(S) VARIABLE SPEED MOTOR CONTROLLER(S) TO MAINTAIN DIFFERENTIAL PRESSURE SETPOINT. CONTROLLER(S) SHALL ENSURE BOTH SENSORS ARE SATISFIED AT ALL TIMES.

3 HOT WATER CONVERTER

3.1 MODULATING STEAM CONTROL VALVES V1 & V2 FOR 211-C1, V4 & V5 FOR 211-C2, AND V7 & V8 FOR 211-C3 (SIZED FOR 1/3 AND 2/3 LOAD) ALONG WITH HOT WATER ISOLATION CONTROL VALVES V3 FOR 211-C1, V6 FOR 211-C2, AND V9 FOR 211-C3 ARE ASSOCIATED WITH THE HOT WATER HEATING SYSTEM. THE STEAM CONTROL VALVES SHALL FAIL CLOSED. THE HOT WATER ISOLATION VALVES SHALL FAIL OPEN. VALVES V1 & V2 (OR V4 & V5 OR V7 & V8) (SMALLER VALVES TO BE THE LEAD VALVES) SHALL BE CONTROLLED FROM OUTDOOR AIR TEMPERATURE AND COMMON LEAVING WATER TEMPERATURE SENSOR T3 TO DELIVER SUPPLY WATER VARYING AS FOLLOWS:

OUTDOOR AIR TEMP	HOT WATER TEMP
0 DEG. F	180 DEG. F
70 DEG. F	95 DEG. F.

3.2 CONTROL SEQUENCE, BASED ON VALVES V1 & V2 (OR V4 & V5 OR V7 & V8), SHALL BE AS FOLLOWS: MODULATE VALVE V1 IN RESPONSE TO DCP. ONCE VALVE IS FULL OPEN, MODULATE VALVE V2 OPEN AND CLOSE VALVE V1. ONCE VALVE V2 IS FULL OPEN, AGAIN MODULATE VALVE V1 IN RESPONSE TO ADDITIONAL STEAM REQUIREMENT. REVERSE CONTROL SEQUENCE ON A DROP IN STEAM CONSUMPTION. ALL VALVES SHALL BE SEPARATE CONTROL POINTS OF THE DCP. (TYPICAL FOR CONTROL OF VALVES V4 & V5 AND V7 & V8).

3.3 ISOLATION CONTROL VALVES V3, V6, AND V9 SHALL OPEN PRIOR TO THEIR RESPECTIVE HOT WATER PUMP STARTING, AND CLOSE WHEN PUMP IS OFF.

SERVICE ROOM CONTROL PANEL POINTS LIST

POINT ID	DEVICE TAG	DEVICE DESCRIPTION	POINT TYPE DI	DO	AI	AO
1	T1	211-C1 LEAVING WATER TEMPERATURE SENSOR			X	
2	T2	COMMON HOT WATER RETURN TEMPERATURE SENSOR			X	
3	T3	COMMON HOT WATER SUPPLY TEMPERATURE SENSOR			X	
4	C1	HOT WATER PUMP 211-P3 STATUS CURRENT SWITCH	X			
5	DP1	HOT WATER SYSTEM DIFFERENTIAL PRESSURE			X	
6	FS1	CHILLED WATER FLOW SWITCH	X			
7	T4	CHILLER 211-CCU1 LEAVING WATER TEMPERATURE SENSOR			X	
8	T5	COMMON PRIMARY CHILLED WATER SUPPLY TEMPERATURE SENSOR			X	
9	T6	COMMON PRIMARY CHILLED WATER RETURN TEMPERATURE SENSOR			X	
10	T7	SECONDARY CHILLED WATER RETURN TEMPERATURE SENSOR			X	
11	T8	SECONDARY CHILLED WATER SUPPLY TEMPERATURE SENSOR			X	
12	C2	SECONDARY CHILLED WATER PUMP 211-P1 STATUS CURRENT SWITCH	X			
13	C3	PRIMARY CHILLED WATER PUMP 211-P2 STATUS CURRENT SWITCH	X			
14	DP2	CHILLED WATER SYSTEM DIFFERENTIAL PRESSURE			X	
15	T9	211-C2 LEAVING WATER TEMPERATURE SENSOR			X	
16	C4	HOT WATER PUMP 211-P7 STATUS CURRENT SWITCH	X			
17	DP3	HOT WATER SYSTEM DIFFERENTIAL PRESSURE			X	
18	FS2	CHILLED WATER FLOW SWITCH	X			
19	T10	CHILLER 211-CCU2 LEAVING WATER TEMPERATURE SENSOR			X	
20	C5	SECONDARY CHILLED WATER PUMP 211-P5 STATUS CURRENT SWITCH	X			
21	C6	PRIMARY CHILLED WATER PUMP 211-P6 STATUS CURRENT SWITCH	X			
22	DP4	CHILLED WATER SYSTEM DIFFERENTIAL PRESSURE			X	
23	C7	SERVICE ROOM PROPELLER EXHAUST FAN 211-EF7 STATUS CURRENT SWITCH	X			
24	C8	SERVICE ROOM PROPELLER EXHAUST FAN 211-EF8 STATUS CURRENT SWITCH	X			
25	T11	PIPE BASEMENT TEMPERATURE SENSOR			X	
26	T12	PIPE BASEMENT TEMPERATURE SENSOR			X	
27	H1	PIPE BASEMENT HUMIDITY SENSOR			X	
28	H2	PIPE BASEMENT HUMIDITY SENSOR			X	
29	T13	211-C3 LEAVING WATER TEMPERATURE SENSOR			X	
30	C9	HOT WATER PUMP 211-P12 STATUS CURRENT SWITCH	X			
31	DP5	HOT WATER SYSTEM DIFFERENTIAL PRESSURE			X	
32	DP6	CHILLED WATER SYSTEM DIFFERENTIAL PRESSURE			X	
A	V1	CONVERTER 211-C1-1/3 STEAM CONTROL VALVE				X
B	V2	CONVERTER 211-C1-2/3 STEAM CONTROL VALVE				X
C	V3	CONVERTER 211-C1 HOT WATER ISOLATION VALVE		X		
D	VSMC1	HOT WATER PUMP 211-P3 VARIABLE SPD. MTR. CONTROLLER W/ STARTER				X
E	R1	HOT WATER PUMP 211-P3 START/STOP		X		
F	VSMC2	SECONDARY CHILLED WATER PUMP 211-P1 VARIABLE SPD. MTR. CONTROLLER W/ STARTER				X
G	R2	SECONDARY CHILLED WATER PUMP 211-P1 START/STOP		X		
H	R3	PRIMARY CHILLED WATER PUMP 211-P2 START/STOP		X		
I	R4	CHILLER 211-CCU1 START/STOP		X		
J	V4	CONVERTER 211-C2-1/3 STEAM CONTROL VALVE				X
K	V5	CONVERTER 211-C2-2/3 STEAM CONTROL VALVE				X
L	V6	CONVERTER 211-C2 HOT WATER ISOLATION VALVE		X		
M	VSMC3	HOT WATER PUMP 211-P7 VARIABLE SPD. MTR. CONTROLLER W/ STARTER				X
N	R5	HOT WATER PUMP 211-P7 START/STOP		X		
O	VSMC4	SECONDARY CHILLED WATER PUMP 211-P5 VARIABLE SPD. MTR. CONTROLLER W/ STARTER				X
P	R6	SECONDARY CHILLED WATER PUMP 211-P5 START/STOP		X		
Q	R7	PRIMARY CHILLED WATER PUMP 211-P6 START/STOP		X		
R	R8	CHILLER 211-CCU2 START/STOP		X		
S	R9	SERVICE ROOM PROPELLER EXHAUST FAN 211-EF7 START/STOP		X		
T	R10	SERVICE ROOM PROPELLER EXHAUST FAN 211-EF8 START/STOP		X		
U	VSMC5	HOT WATER PUMP 211-P12 VARIABLE SPD. MTR. CONTROLLER W/ STARTER				X
V	R11	HOT WATER PUMP 211-P12 START/STOP		X		
W	V7	CONVERTER 211-C3-1/3 STEAM CONTROL VALVE				X
X	V8	CONVERTER 211-C3-2/3 STEAM CONTROL VALVE				X
Y	V9	CONVERTER 211-C3 HOT WATER ISOLATION VALVE		X		

LEGEND (APPLIES TO SERVICE ROOM CONTROL PANEL)

C1	PUMP 211-P3 CURRENT SENSING RELAY	TRANSMITS MOTOR CURRENT TO DCP TO INDICATE STATUS OF PUMP 211-P3.
C2	PUMP 211-P1 CURRENT SENSING RELAY	TRANSMITS MOTOR CURRENT TO DCP TO INDICATE STATUS OF PUMP 211-P1.
C3	PUMP 211-P2 CURRENT SENSING RELAY	TRANSMITS MOTOR CURRENT TO DCP TO INDICATE STATUS OF PUMP 211-P2.
C4	PUMP 211-P7 CURRENT SENSING RELAY	TRANSMITS MOTOR CURRENT TO DCP TO INDICATE STATUS OF PUMP 211-P7.
C5	PUMP 211-P5 CURRENT SENSING RELAY	TRANSMITS MOTOR CURRENT TO DCP TO INDICATE STATUS OF PUMP 211-P5.
C6	PUMP 211-P6 CURRENT SENSING RELAY	TRANSMITS MOTOR CURRENT TO DCP TO INDICATE STATUS OF PUMP 211-P6.
C7	EXHAUST FAN 211-EF7 CURRENT SENSING RELAY	TRANSMITS MOTOR CURRENT TO DCP TO INDICATE STATUS OF FAN 211-EF7.
C8	EXHAUST FAN 211-EF8 CURRENT SENSING RELAY	TRANSMITS MOTOR CURRENT TO DCP TO INDICATE STATUS OF FAN 211-EF8.
C9	PUMP 211-P12 CURRENT SENSING RELAY	TRANSMITS MOTOR CURRENT TO DCP TO INDICATE STATUS OF PUMP 211-P12.
DCP	DISTRIBUTED CONTROL PANEL	CONTROLS SEQUENCE OF HVAC SYSTEMS IN ACCORDANCE WITH THE SEQUENCE OF OPERATION.
DP1 DP3 DP5	HEATING HOT WATER SYSTEM DIFFERENTIAL PRESSURE SENSORS	TRANSMITS HEATING HOT WATER DIFFERENTIAL PRESSURE TO DCP FOR CONTROL OF PUMP VARIABLE SPEED MOTOR CONTROLLER(S).
DP2 DP4 DP6	CHILLED WATER SYSTEM DIFFERENTIAL PRESSURE SENSORS	TRANSMITS CHILLED WATER DIFFERENTIAL PRESSURE TO DCP FOR CONTROL OF PUMP VARIABLE SPEED MOTOR CONTROLLER(S).
FS1	CHILLER 211-CCU1 FLOW SWITCH	HARD WIRED CONNECTION TO CHILLER CONTROL PANEL TO PROVE FLOW BEFORE CHILLER IS ALLOWED TO OPERATE.
FS2	CHILLER 211-CCU2 FLOW SWITCH	HARD WIRED CONNECTION TO CHILLER CONTROL PANEL TO PROVE FLOW BEFORE CHILLER IS ALLOWED TO OPERATE.
H1	PIPE BASEMENT HUMIDITY SENSOR	SENSES AND TRANSMITS PIPE BASEMENT HUMIDITY TO DCP FOR CONTROL OF 211-EF7.
H2	PIPE BASEMENT HUMIDITY SENSOR	SENSES AND TRANSMITS PIPE BASEMENT HUMIDITY TO DCP FOR CONTROL OF 211-EF8.
R1	PUMP 211-P3 START/STOP RELAY	CONTROLS STARTING & STOPPING OF PUMP 211-P3.
R2	PUMP 211-P1 START/STOP RELAY	CONTROLS STARTING & STOPPING OF CHILLER 211-P1.
R3	PUMP 211-P2 START/STOP RELAY	CONTROLS STARTING & STOPPING OF CHILLER 211-P2.
R4	PUMP 211-CCU1 START/STOP RELAY	CONTROLS STARTING & STOPPING OF CHILLER 211-CCU1.
R5	PUMP 211-P7 START/STOP RELAY	CONTROLS STARTING & STOPPING OF PUMP 211-P7.
R6	PUMP 211-P5 START/STOP RELAY	CONTROLS STARTING & STOPPING OF PUMP 211-P5.
R7	PUMP 211-P6 START/STOP RELAY	CONTROLS STARTING & STOPPING OF PUMP 211-P6.
R8	CHILLER 211-CCU2 START/STOP RELAY	CONTROLS STARTING & STOPPING OF CHILLER 211-CCU2.
R9	EXHAUST FAN 211-EF7 START/STOP RELAY	CONTROLS STARTING & STOPPING OF EXHAUST FAN 211-EF7.
R10	EXHAUST FAN 211-EF8 START/STOP RELAY	CONTROLS STARTING & STOPPING OF EXHAUST FAN 211-EF8.
R11	PUMP 211-P12 START/STOP RELAY	CONTROLS STARTING & STOPPING OF PUMP 211-P12.
T1	CONVERTER 2-C1 LEAVING WATER TEMPERATURE SENSOR	SENSES AND TRANSMITS CONVERTER LEAVING HOT WATER TEMPERATURE TO DCP FOR INDICATION ONLY.
T2	COMMON HOT WATER RETURN WATER TEMPERATURE SENSOR	SENSES AND TRANSMITS COMMON HOT WATER RETURN TEMPERATURE TO DCP FOR INDICATION ONLY.
T3	COMMON HOT WATER SUPPLY WATER TEMPERATURE SENSOR	SENSES AND TRANSMITS COMMON HOT WATER SUPPLY TEMPERATURE TO DCP FOR CONTROL AND INDICATION.
T4	CHILLER 211-CCU1 LEAVING WATER TEMPERATURE SENSOR	SENSES AND TRANSMITS CHILLER LEAVING WATER TEMPERATURE TO DCP FOR CONTROL AND INDICATION.
T5	COMMON PRIMARY CHILLED WATER SUPPLY TEMPERATURE SENSOR	SENSES AND TRANSMITS PRIMARY CHILLED WATER SUPPLY TEMPERATURE TO DCP FOR CONTROL AND INDICATION.
T6	COMMON PRIMARY CHILLED WATER RETURN TEMPERATURE SENSOR	SENSES AND TRANSMITS PRIMARY CHILLED WATER RETURN TEMPERATURE TO DCP FOR CONTROL AND INDICATION.
T7	SECONDARY CHILLED WATER RETURN TEMPERATURE SENSOR	SENSES AND TRANSMITS SECONDARY CHILLED WATER RETURN TEMPERATURE TO DCP FOR CONTROL AND INDICATION.

LEGEND CONTINUED (APPLIES TO SERVICE ROOM CONTROL PANEL)

T8	SECONDARY CHILLED WATER SUPPLY TEMPERATURE SENSOR	SENSES AND TRANSMITS SECONDARY CHILLED WATER SUPPLY TEMPERATURE TO DCP FOR CONTROL AND INDICATION.
T9	CONVERTER 211-C2 LEAVING WATER TEMPERATURE SENSOR	SENSES AND TRANSMITS CONVERTER LEAVING HOT WATER TEMPERATURE TO DCP FOR INDICATION ONLY.
T10	CHILLER 211-CCU2 LEAVING WATER TEMPERATURE SENSOR	SENSES AND TRANSMITS CHILLER LEAVING WATER TEMPERATURE TO DCP FOR CONTROL AND INDICATION.
T11	PIPE BASEMENT TEMPERATURE SENSOR	SENSES AND TRANSMITS PIPE BASEMENT TEMPERATURE TO DCP FOR CONTROL OF 211-EF7.
T12	PIPE BASEMENT TEMPERATURE SENSOR	SENSES AND TRANSMITS PIPE BASEMENT TEMPERATURE TO DCP FOR CONTROL OF 211-EF8.
T13	CONVERTER 211-C3 LEAVING WATER TEMPERATURE SENSOR	SENSES AND TRANSMITS CONVERTER LEAVING HOT WATER TEMPERATURE TO DCP FOR INDICATION ONLY.
V1	MODULATING STEAM CONTROL VALVE (1/3 CAPACITY)	PROPORTIONS FLOW OF STEAM TO CONVERTER 211-C1 IN RESPONSE TO DCP.
V2	MODULATING STEAM CONTROL VALVE (2/3 CAPACITY)	PROPORTIONS FLOW OF STEAM TO CONVERTER 211-C1 IN RESPONSE TO DCP.
V3	TWO-POSITION ISOLATION CONTROL VALVE	ISOLATES HOT WATER FLOW TO CONVERTER 211-C1 IN RESPONSE TO DCP.
V4	MODULATING STEAM CONTROL VALVE (1/3 CAPACITY)	PROPORTIONS FLOW OF STEAM TO CONVERTER 211-C2 IN RESPONSE TO DCP.
V5	MODULATING STEAM CONTROL VALVE (2/3 CAPACITY)	PROPORTIONS FLOW OF STEAM TO CONVERTER 211-C2 IN RESPONSE TO DCP.
V6	TWO-POSITION ISOLATION CONTROL VALVE	ISOLATES HOT WATER FLOW TO CONVERTER 211-C2 IN RESPONSE TO DCP.
V7	MODULATING STEAM CONTROL VALVE (1/3 CAPACITY)	PROPORTIONS FLOW OF STEAM TO CONVERTER 211-C3 IN RESPONSE TO DCP.
V8	MODULATING STEAM CONTROL VALVE (2/3 CAPACITY)	PROPORTIONS FLOW OF STEAM TO CONVERTER 211-C3 IN RESPONSE TO DCP.
V9	TWO-POSITION ISOLATION CONTROL VALVE	ISOLATES HOT WATER FLOW TO CONVERTER 211-C3 IN RESPONSE TO DCP.
VSMC1	VARIABLE SPEED MOTOR CONTROLLER WITH MOTOR STARTER.	CONTROLS SPEED OF PUMP 211-P3 IN RESPONSE TO DCP.
VSMC2	VARIABLE SPEED MOTOR CONTROLLER WITH MOTOR STARTER.	CONTROLS SPEED OF PUMP 211-P1 IN RESPONSE TO DCP.
VSMC3	VARIABLE SPEED MOTOR CONTROLLER WITH MOTOR STARTER.	CONTROLS SPEED OF PUMP 211-P7 IN RESPONSE TO DCP.
VSMC4	VARIABLE SPEED MOTOR CONTROLLER WITH MOTOR STARTER.	CONTROLS SPEED OF PUMP 211-P5 IN RESPONSE TO DCP.
VSMC5	VARIABLE SPEED MOTOR CONTROLLER WITH MOTOR STARTER.	CONTROLS SPEED OF PUMP 211-P12 IN RESPONSE TO DCP.

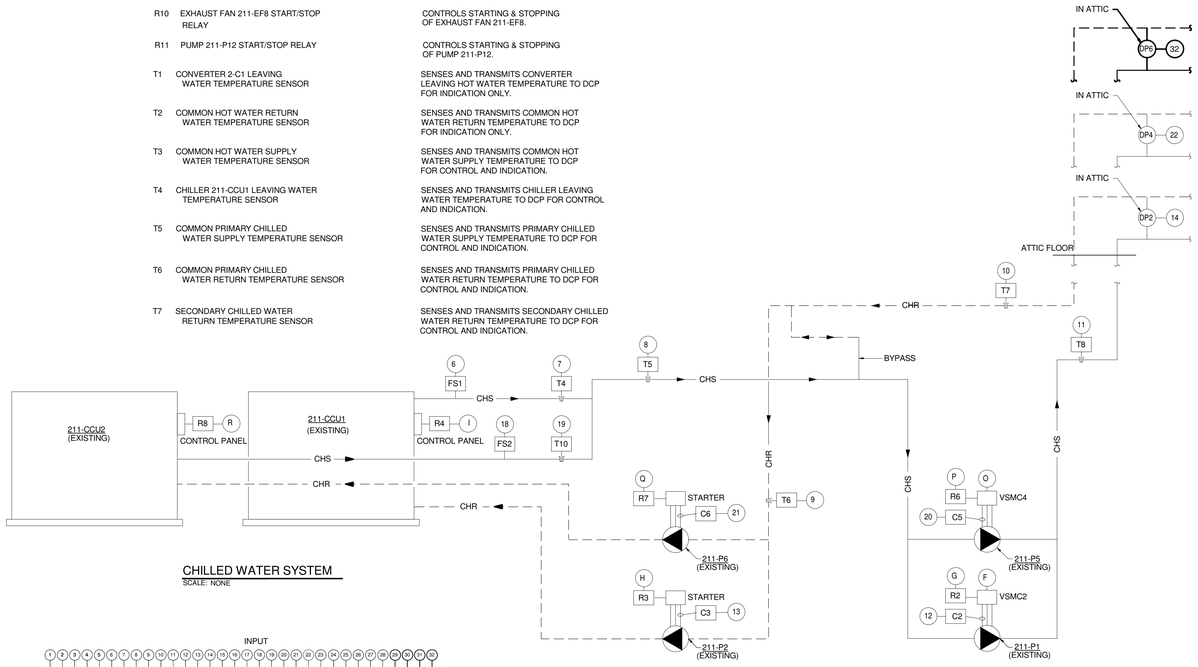

CHILLED WATER SYSTEM

SCALE: NONE

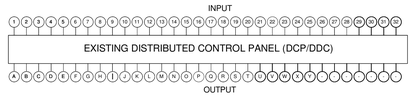

EXISTING SERVICE ROOM CONTROL PANEL

Revisions	Date

CONSULTANTS:

Heapy Engineering
Mechanical Electrical Commissioning Technology
Nationally Recognized Leader in Sustainability / LEED
1400 W Dorothy Lane, Dayton OH 45409-1310
Ph: 937-224-0861 Fax: 937-224-5777 www.heapy.com
PROJECT NO. 2010-04024 FIRM LICENSE NO. 01528

STATE OF OHIO — JOHN A. BLACK 49341 — REGISTERED PROFESSIONAL ENGINEER

ARCHITECT/ENGINEERS:

JOHN POE ARCHITECTS
116 EAST THIRD STREET
DAYTON, OHIO
45402-2130
937 461 3290 PHONE
937 461 0260 FAX
jpa@johnpoe.com

Drawing Title: CONTROLS AND AUTOMATION

Approved: Project Director

Project Title: RENOVATE CLC BUILDING 211 WEST

Location: Chillicothe, Ohio

Date: 09/06/2013 | Checked: JAC | Drawn: TEG

Project No. VA Project No. 538-107 JPA Project No. 11001.00

Building Number: 211

Drawing Number: H11

Dwg. 84 of 132

Office of Construction and Facilities Management
Department of Veterans Affairs

9/6/2013 1:30:49 PM

THIS SHEET SHOWS ORIGINAL DESIGN FOR CONTROL OF THESE SYSTEMS, AND IS BEING INCLUDED FOR REFERENCE ONLY, TO ASSIST BIDDERS IN PRICING REQUIRED HARDWARE, SOFTWARE, PROGRAMMING, ETC. IF EXISTING SEQUENCES ARE DIFFERENT FROM WHAT IS SHOWN ON THIS SHEET, MATCH EXISTING SEQUENCES.

FULLY SPRINKLERED

GENERAL NOTES

1 A COMPLETE SYSTEM OF AUTOMATIC TEMPERATURE CONTROLS SHALL BE INSTALLED UNDER THIS CONTRACT, AS REQUIRED TO ACCOMPLISH THE SEQUENCE OF CONTROL FOR VARIOUS ITEMS OF EQUIPMENT AND SYSTEMS AS DESCRIBED HEREINAFTER. THE SYSTEM SHALL BE A DIRECT DIGITAL CONTROL SYSTEM UTILIZING ELECTRIC ACTUATION.

2 ELECTRICAL WORK INCLUDES A POWER SOURCE TO THE MOTOR STARTERS. ALL HVAC POWER SOURCES REQUIRED BEYOND THESE STARTERS OR BEYOND SOURCES EXPLICITLY SHOWN ON THE ELECTRICAL DRAWINGS, SHALL BE PROVIDED UNDER THE ATC WORK. THIS WORK SHALL INCLUDE BUT NOT BE LIMITED TO WIRING, CONDUIT, TRANSFORMERS, RELAYS AND FUSES.

3 BULB WELLS FOR TEMPERATURE SENSING AS INDICATED SHALL BE FURNISHED UNDER THE ATC WORK AND INSTALLED AS PART OF THE HVAC PIPING WORK. PIPING WORK SHALL INCLUDE PROPERLY SIZED WELDOLET OR THREADOLET FITTINGS PLACED AS DIRECTED BY THE CONTROL SYSTEM MANUFACTURER

4 INPUT/OUTPUT POINTS LIST IS SHOWN AS AN AID TO THE CONTRACTOR INDICATING THE MINUMUM POINTS REQUIRED FOR CONTROL AND MONITORING. ALL INPUT AND OUTPUT POINTS, AND THEIR REQUIRED INTERFACE AND ACCESSORY HARDWARE, SHALL BE PROVIDED FOR A COMPLETE AND FUNCTIONAL CONTROL SYSTEM. IF OR WHEN ADDITIONAL POINTS ARE REQUIRED TO ACCOMPLISH THE SEQUENCES OF CONTROL SPECIFIED, THESE POINTS, ALONG WITH ADDITIONAL DISTRIBUTED CONTROL PANEL(S) (IF REQUIRED), SHALL ALSO BE PROVIDED.

SEQUENCE OF OPERATION (211-AC4)

1 GENERAL

1.1 UNIT IS NORMALLY STARTED AND STOPPED BY THE DCP OR REMOTELY AT THE ECC. H-0-A SWITCH SHALL BE KEPT IN THE "AUTO" POSITION. "HAND" AND "OFF" POSITIONS SHALL BE USED ONLY FOR MAINTENANCE. WHEN THE UNIT IS "OFF" FOR ANY REASON, D1 AND D3 SHALL BE FULLY CLOSED, D2 SHALL BE FULLY OPEN, AND SUPPLY AND RETURN FANS SHALL BE OFF. WHEN THE UNIT IS "ON", SUPPLY AND RETURN FANS SHALL BE ON, AND D1, D2 AND D3, SHALL MODULATE IN ACCORDANCE WITH THE FOLLOWING SEQUENCE:

2 TEMPERATURE CONTROL

2.1 THE SUPPLY AIR TEMPERATURE, SENSED BY T1, SHALL BE MAINTAINED AT SETPOINT OF 55 DEG. F BY DCP MODULATING V1 OR D1, D2 AND D3 OR V2 IN SEQUENCE.

2.2 WHEN THE TEMPERATURE OF THE OUTSIDE AIR, SENSED BY T2, IS ABOVE 65 DEG.F., AND CHILLED WATER IS AVAILABLE, THE DCP SHALL PREVENT THE MODULATION OF D1, D2 AND D3 AND SHALL ASSUME THE MINIMUM OUTSIDE AIR POSITION (D1 PARTIALLY OPENED AND D2 PARTIALLY CLOSED TO MAINTAIN MINIMUM OUTSIDE AIR, AND D3 PARTIALLY OPENED). THE DCP SHALL MODULATE V2 TO MAINTAIN THE SUPPLY AIR TEMPERATURE, SENSED BY T1. IF CHILLED WATER IS UNAVAILABLE, UNIT IS TO STAY IN MODE AS DESCRIBED IN 2.3 BELOW.

2.3 WHEN THE TEMPERATURE OF THE OUTSIDE AIR, SENSED BY T2, IS BETWEEN 65 DEG.F. AND THE SUPPLY AIR TEMPERATURE SETPOINT, SENSED BY T1, DAMPER D2 SHALL BE FULLY CLOSED AND DAMPERS D1 AND D3 SHALL BE FULLY OPENED (MAXIMUM OUTSIDE AIR POSITION). THE DCP SHALL OPEN VALVE V5 AND MODULATE V2 TO MAINTAIN THE SUPPLY AIR TEMPERATURE SENSED BY T1.

2.4 WHEN THE TEMPERATURE OF THE OUTSIDE AIR, SENSED BY T2, IS BELOW THE SUPPLY AIR TEMPERATURE SETPOINT, SENSED BY T1, DAMPERS D1, D2 AND D3 SHALL MODULATE TO MAINTAIN THE SCHEDULED SUPPLY AIR TEMPERATURE. IF D2 IS OPEN AND D3 IS CLOSED IN THIS MODE, V1 SHALL MODULATE OPEN TO MAINTAIN THE SUPPLY AIR TEMPERATURE SENSED BY T1.

3 AIR FLOW CONTROL

3.1 THE SUPPLY AIR FLOW SHALL BE CONTROLLED BY THE DCP THRU THE SUPPLY FAN VARIABLE FREQUENCY MOTOR CONTROLLER (VSMC) TO MAINTAIN A MINIMUM DUCT STATIC PRESSURE SETPOINT (SET AT 1.0" STATIC PRESSURE) AS SENSED BY SPS1 AND SPS2 (SEE PLANS FOR LOCATIONS)

3.2 THE DCP, USING TOTAL SUPPLY AIR AND RETURN AIR FLOW SIGNALS (VPS1 & 2), SHALL RESET THE RETURN AIR FAN VARIABLE FREQUENCY MOTOR CONTROLLER (VSMC) TO MAINTAIN A MINIMUM OUTSIDE AIR CFM DIFFERENCE (850 CFM), BETWEEN THE CFM FOR THE SUPPLY FAN AND THE CFM FOR THE RETURN FAN, SO AS TO ACHIEVE THE REQUIRED MINIMUM OUTSIDE AIR CFM.

3.3 VARIABLE SPEED MOTOR CONTROLLERS SHALL RESPOND TO START/STOP COMMANDS AND ALL SAFETIES (FREEZE, SMOKE, ETC.) WHETHER IN THE AUTOMATIC OR BYPASS MODES.

3.4 THE DCP USING HIGH PRESSURE SENSOR SPS3 LOCATED AT THE SUPPLY FAN DISCHARGE SHALL PREVENT THE SUPPLY FAN FROM DEVELOPING OVER 4 INCHES OF POSITIVE STATIC PRESSURE (FIELD ADJUSTABLE). IF STATIC PRESSURE AT SPS3 EXCEEDS 4 INCHES OF POSITIVE PRESSURE, THE SUPPLY AND RETURN FANS SHALL SHUT "OFF".

3.5 THE DCP USING HIGH PRESSURE SENSOR SPS4 LOCATED AT THE RETURN FAN INLET SHALL PREVENT THE RETURN FAN FROM DEVELOPING OVER 2 INCHES OF NEGATIVE STATIC PRESSURE (FIELD ADJUSTABLE). IF STATIC PRESSURE AT SPS4 EXCEEDS 2 INCHES OF NEGATIVE PRESSURE, THE SUPPLY AND RETURN FANS SHALL SHUT "OFF".

4 FREEZE PROTECTION

4.1 IF THE AIR TEMPERATURE AS SENSED BY T3 FALLS BELOW 38 DEG.F, THE UNIT SUPPLY AND RETURN FANS SHALL SHUT DOWN, VALVE V1 SHALL OPEN, AND A CRITICAL ALARM SHALL BE INDICATED AT THE DCP AND ECC.

5 AUTOMATIC SHUTDOWN/RESTART

5.1 WHEN SMOKE IS DETECTED BY DUCT SMOKE DETECTOR DSD, THE SUPPLY AND RETURN FANS SHALL SHUT "OFF" AND AN ALARM SIGNAL SHALL BE TRANSMITTED TO THE FIRE ALARM SYSTEM. EXHAUST FANS SERVING SPACE OF THE SUPPLY FAN SHALL CONTINUE TO RUN. SUPPLY AND RETURN FANS SHALL RESTART WHEN FIRE ALARM CIRCUIT IS RESET.

6 EMERGENCY CONSTANT SPEED OPERATION

6.1 ON ALL VSMC FANS IN VAV SYSTEMS, UPON FAILURE OF THE VSMC, THE FANS SHALL BE STARTED/STOPPED MANUALLY AT THE DCP OR ECC THROUGH THE BYPASS STARTER. FANS SHALL THEN BE OPERATED AT CONSTANT SPEED.

7 DISCHARGE AIR RESET

7.1 THE AIR HANDLING UNIT CONTROLS SHALL PROVIDE DISCHARGE AIR TEMPERATURE CONTROL BASED ON ZONE DEMAND DEVIATION FROM SETPOINT. ALL ZONES SHALL BE SAMPLED AND THE ZONE FURTHEST FROM SETPOINT SHALL GOVERN. AS THE DEVIATION FROM SETPOINT DECREASES, THE DISCHARGE AIR SHALL BE RESET. 55 DEG. F AND 62 DEG. F SHALL BE THE LOW AND HIGH RESET LIMITS, RESPECTIVELY. ALL CONTROL SETPOINTS (INCLUDING HIGH AND LOW SET POINTS FOR DISCHARGE AIR TEMPERATURE) SHALL BE FULLY ADJUSTABLE TO MEET JOB CONDITIONS.

8 HUMIDITY CONTROL

8.1 WHEN THE DCP IS NOT CALLING FOR HUMIDITY, SENSED BY RETURN AIR HUMIDITY H1, 2-WAY "ON-OFF" CONTROL VALVE V3 SHALL REMAIN CLOSED. WHEN THE DCP IS CALLING FOR HUMIDITY, V3 SHALL REMAIN OPEN.

8.2 RETURN AIR HUMIDITY, SENSED BY H1, SHALL BE MAINTAINED AT SETPOINT (30% RH) VIA DCP BY MODULATING CONTROL VALVE V4 TO MAINTAIN THE DESIRED HUMIDITY. THE DCP SHALL OVERRIDE THIS CONTROL TO LIMIT HUMIDITY TO 80% AS SENSED BY H2. DCP SHALL CLOSE VALVE V3 WHENEVER THE SUPPLY FAN IS OFF. VALVE V4 SHALL BE INTERLOCKED WITH A TEMPERATURE SWITCH TO KEEP THE HUMIDIFIER OFF UNTIL CONDENSATE TEMPERATURE APPROACHES STEAM TEMPERATURE.

8.3 ON-OFF CONTROL VALVE V3 SHALL REMAIN CLOSED WHENEVER THE OUTSIDE AIR TEMPERATURE IS ABOVE 55 DEG.F.

9 SEASONAL HOT WATER CONTROL

9.1 ON-OFF CONTROL VALVE V6 SHALL REMAIN CLOSED WHENEVER THE TEMPERATURE IN THE COMBINATION HOT/CHILLED WATER PIPING IS BELOW 120 DEG.F.

LEGEND (APPLIES TO AIR HANDLING UNIT 211-AC4)

C	CURRENT SENSING RELAY	TRANSMITS MOTOR CURRENT TO DCP TO INDICATE STATUS OF FANS.
DP	DIFFERENTIAL PRESSURE SENSOR	TRANSMITS DIFFERENTIAL PRESSURE TO DCP TO INDICATE FILTER CONDITION
DCP	DISTRIBUTED CONTROL PANEL	CONTROLS OPERATION OF AIR HANDLING UNIT IN ACCORDANCE WITH THE SEQUENCE OF OPERATION
D1	MODULATING OUTSIDE AIR DAMPER	PROPORTIONS FLOW OF OUTSIDE AIR IN RESPONSE TO DCP AND CLOSES WHEN SUPPLY FAN STOPS
D2	MODULATING RETURN AIR DAMPER	PROPORTIONS FLOW OF RETURN AIR IN RESPONSE TO DCP AND OPENS WHEN SUPPLY FAN STOPS
D3	MODULATING RELIEF AIR DAMPER	PROPORTIONS FLOW OF RELIEF AIR IN RESPONSE TO DCP AND CLOSES WHEN SUPPLY FAN STOPS
DSD	DUCT SMOKE DETECTORS (FURNISHED AND WIRED TO FIRE ALARM PANEL BY ELECTRICAL)	PROVIDE SMOKE SIGNAL TO DCP
ECC	ENGINEERING CONTROL CENTER	LOCATED IN ENGINEERING BUILDING FOR MONITORING OF SYSTEM OPERATIONS
H1	RETURN AIR HUMIDITY SENSOR	SENSES AND TRANSMITS RETURN AIR HUMIDITY TO DCP FOR CONTROL AND INDICATION
H2	SUPPLY AIR HUMIDITY SENSOR	SENSES AND TRANSMITS SUPPLY AIR HUMIDITY TO DCP FOR CONTROL AND INDICATION
SPS1	STATIC PRESSURE SENSOR (SEE FLOOR PLANS FOR LOCATION)	SENSES AND TRANSMITS DUCT STATIC PRESSURE TO DCP
SPS2	STATIC PRESSURE SENSOR (SEE FLOOR PLANS FOR LOCATION)	SENSES AND TRANSMITS DUCT STATIC PRESSURE TO DCP
SPS3	HIGH LIMIT STATIC PRESSURE SENSOR	SENSES AND TRANSMITS DUCT STATIC PRESSURE NEAR SUPPLY FAN TO DCP
SPS4	HIGH LIMIT STATIC PRESSURE SENSOR	SENSES AND TRANSMITS DUCT STATIC PRESSURE NEAR RETURN FAN TO DCP
T1	SUPPLY AIR TEMPERATURE SENSOR	SENSES AND TRANSMITS SUPPLY AIR DRY BULB TEMPERATURE TO DCP FOR CONTROL AND INDICATION
T2	OUTSIDE AIR TEMPERATURE SENSOR	SENSES AND TRANSMITS OUTSIDE AIR DRY BULB TEMPERATURE TO DCP FOR CONTROL AND INDICATION
T3	FREEZESTAT	SENSES AND TRANSMITS PREHEAT AIR DRY BULB TEMPERATURE TO DCP FOR FREEZE CONDITION
T4	RETURN AIR TEMPERATURE SENSOR	SENSES AND TRANSMITS RETURN AIR DRY BULB TEMPERATURE TO DCP FOR INDICATION ONLY
T5	MIXED AIR TEMPERATURE SENSOR	SENSES AND TRANSMITS MIXED AIR DRY BULB TEMPERATURE TO DCP FOR CONTROL AND INDICATION
V1	MODULATING STEAM CONTROL VALVE	PROPORTIONS FLOW OF STEAM TO PREHEAT COIL IN RESPONSE TO DCP
V2	MODULATING CHILLED WATER CONTROL VALVE, TWO WAY TYPE	PROPORTIONS FLOW OF CHILLED WATER TO COOLING COIL IN RESPONSE TO DCP
V3	STEAM CONTROL VALVE, TWO POSITION TWO WAY	CONTROLS STEAM FLOW TO HUMIDIFIER
V4	STEAM CONTROL VALVE, MODULATING TWO WAY	PROPORTIONS FLOW OF STEAM TO HUMIDIFIER IN RESPONSE TO DCP
V5	CHILLED WATER CONTROL VALVE, TWO POSITION TWO WAY	CONTROLS CHILLED WATER FLOW TO COOLING COIL
VPS	VELOCITY PRESSURE SENSOR	SENSES AND TRANSMITS VELOCITY PRESSURE TO DCP
VSMC	VARIABLE SPEED MOTOR CONTROLLER WITH MOTOR STARTER	CONTROLS SUPPLY AND RETURN FAN MOTOR SPEEDS IN RESPONSE TO DCP

CONTROL POINTS LIST

AIR HANDLING UNIT 211-AC4

TYPE	DESCRIPTION	MINIMUM QUANTITY
AI	OUTSIDE AIR TEMPERATURE	1
AI	RETURN AIR TEMPERATURE	1
AI	MIXED AIR TEMPERATURE	1
AI	SUPPLY AIR TEMPERATURE	1
AI	SUPPLY AIR STATIC PRESSURE	1
DO	SUPPLY FAN START/STOP	1
DO	RETURN FAN START/STOP	1
DI	SUPPLY FAN STATUS	1
DI	RETURN FAN STATUS	1
AO	SUPPLY FAN SPEED CONTROL	1
AO	RETURN FAN SPEED CONTROL	1
AO	OUTSIDE AIR DAMPER	1
AO	RETURN AIR DAMPER	1
AO	RELIEF AIR DAMPER	1
AO	PREHEAT COIL VALVE	1
AO	COOLING COIL VALVE	1
AI	PREFILTER PRESSURE DROP	1
DI	FREEZESTAT	1
AI	RETURN AIR HUMIDITY	1
AI	SUPPLY AIR HUMIDITY HIGH LIMIT	1
DO	HUMIDIFIER 2 POSITION VALVE	1
AO	STEAM HUMIDIFIER CONTROL VALVE	1
DI	SUPPLY DUCT HIGH STATIC SAFETY	1
DI	RETURN DUCT HIGH STATIC SAFETY	1
DI	FIRE SYSTEM SHUTDOWN	1
AI	ZONE SPACE TEMPERATURE	*
AO	ZONE CONTROL OUTPUT	*
AI	SUPPLY AIR FLOW MEASURING STATION	1
AI	RETURN AIR FLOW MEASURING STATION	1
DO	COOLING COIL TWO POSITION VALVE	1

* DDC ZONE CONTROL IS SPECIFIED, PROVIDE ZONE TEMPERATURE SENSOR AND MODULATING OUTPUT FOR EACH ZONE.

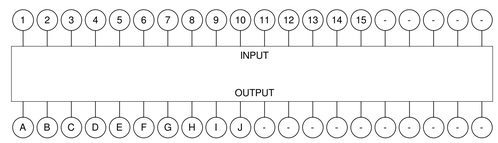

NEW DISTRIBUTED CONTROL PANEL #1 (DCP/DDC)

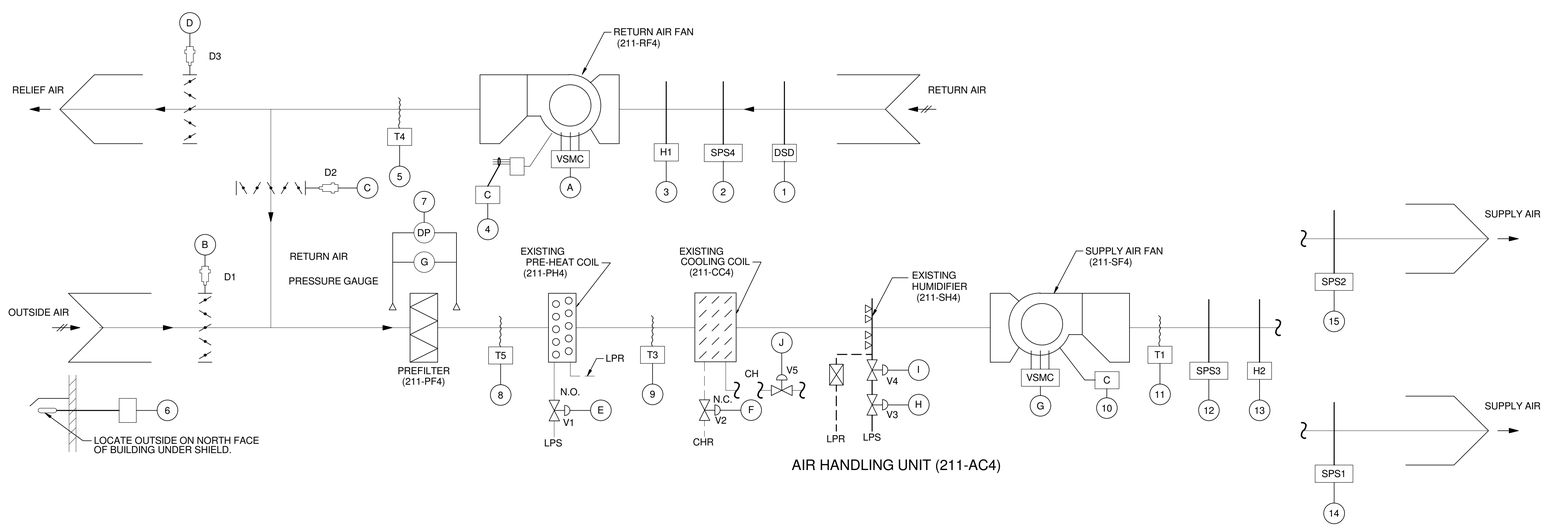

AIR HANDLING UNIT (211-AC4)

VVR CONTROL SEQUENCES

1 VARIABLE VOLUME REHEAT TERMINAL CONTROL

1.1 WHEN ROOM TEMPERATURE AT T1 IS BELOW SETPOINT, THE CONTROL DAMPER ACTUATOR, D1 SHALL MODULATE THE DAMPER TO REDUCE AIRFLOW TO THE SUMMER MINIMUM SETTING. ON A FURTHER DROP IN ROOM TEMPERATURE AT T1, THE CONTROL DAMPER SHALL BE MODULATED UPWARD TO THE WINTER MINIMUM AIRFLOW AND THE HOT WATER VALVE V1 SHALL MODULATE OPEN TO COIL TO MAINTAIN TEMPERATURE SETPOINT.

1.2 AS ROOM TEMPERATURE RISES ABOVE SETPOINT, HOT WATER VALVE V1 SHALL CLOSE. IF THE ROOM TEMPERATURE CONTINUES TO RISE ABOVE SETPOINT, DAMPER D1 SHALL MODULATE FROM SUMMER (COOLING) MINIMUM AIRFLOW TO MAXIMUM AIRFLOW TO MAINTAIN ROOM TEMPERATURE.

1.3 EACH TERMINAL UNIT SHALL INCLUDE AN AIRFLOW SENSOR FOR CALCULATING CFM, AND A DISCHARGE AIR TEMPERATURE SENSOR.

1.4 EXTEND 24 VOLT POWER TO THE TERMINAL BOX CONTROLLER FROM AN EXISTING DDC CONTROL PANEL, OR PROVIDE NEW PANEL IF EXISTING PANEL CANNOT ACCEPT ADDITIONAL POINTS.

1.5 ROOM SPACE TEMPERATURE SET POINT SHALL BE ADJUSTABLE FROM THE FRONT END COMPUTER INTERFACE.

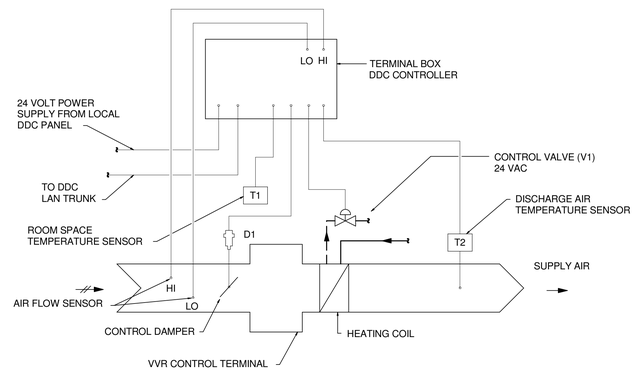

VVR TERMINAL CONTROLS

Revisions	Date

CONSULTANTS:

Heapy Engineering
Mechanical Electrical Commissioning Technology
Nationally Recognized Leader in Sustainability / LEED
1400 W Dorothy Lane, Dayton OH 45409-1310
Ph: 937-224-0861 Fax: 937-224-5777 www.heapy.com
PROJECT NO. 2010-04024 FIRM LICENSE NO. 01528

STATE OF OHIO — JOHN A. BLACK 49341 — REGISTERED PROFESSIONAL ENGINEER

ARCHITECT/ENGINEERS:

JOHN POE ARCHITECTS
116 EAST THIRD STREET
DAYTON, OHIO
45402-2130
937 461 3290 PHONE
937 461 0260 FAX
jpa@johnpoe.com

Drawing Title: CONTROLS AND AUTOMATION

Approved: Project Director

Project Title: RENOVATE CLC BUILDING 211 WEST

Location: Chillicothe, Ohio

Date: 09/06/2013 | Checked: JAC | Drawn: TEG

Project No. VA Project No. 538-107 JPA Project No. 11001.00

Building Number: 211

Drawing Number: H12

Dwg. 85 of 132

Office of Construction and Facilities Management

Department of Veterans Affairs

9/6/2013 1:30:50 PM

FULLY SPRINKLERED

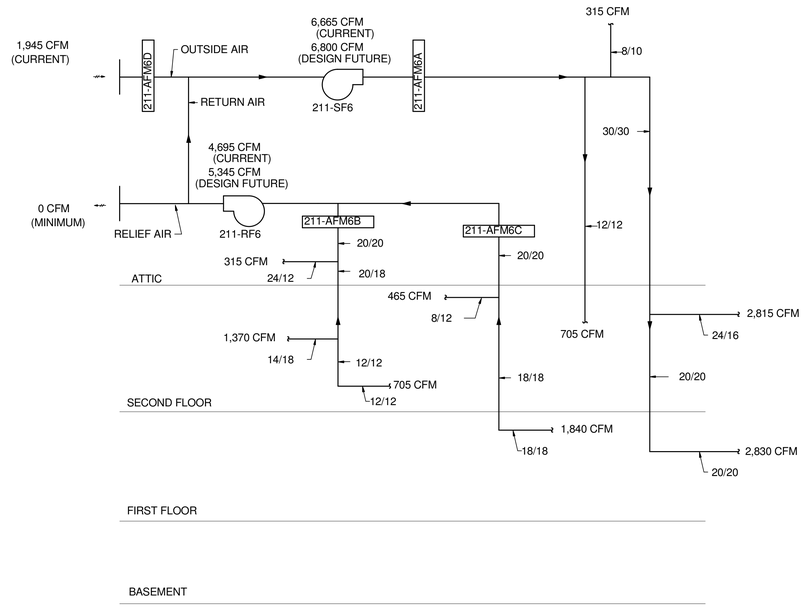

211-AHU6 SYSTEM AIR FLOW DIAGRAM

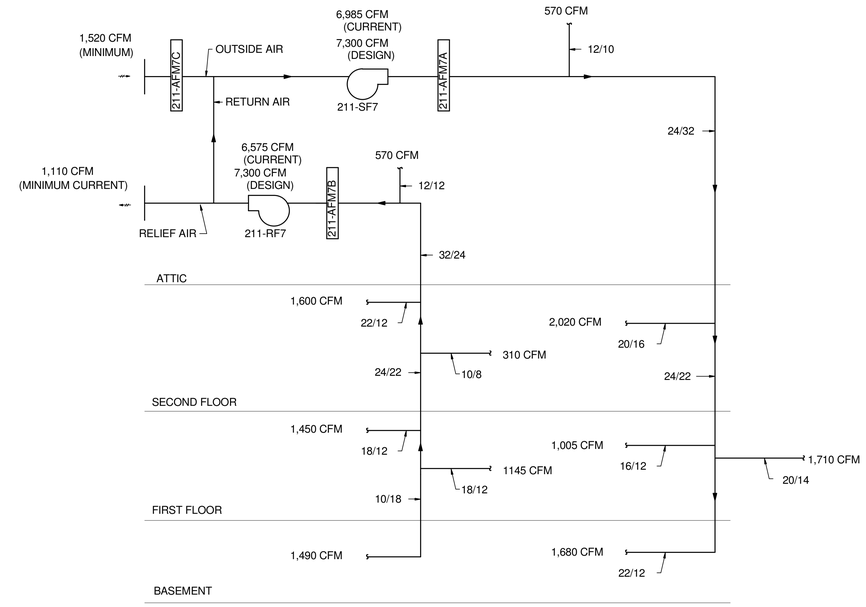

211-AHU7 SYSTEM AIR FLOW DIAGRAM

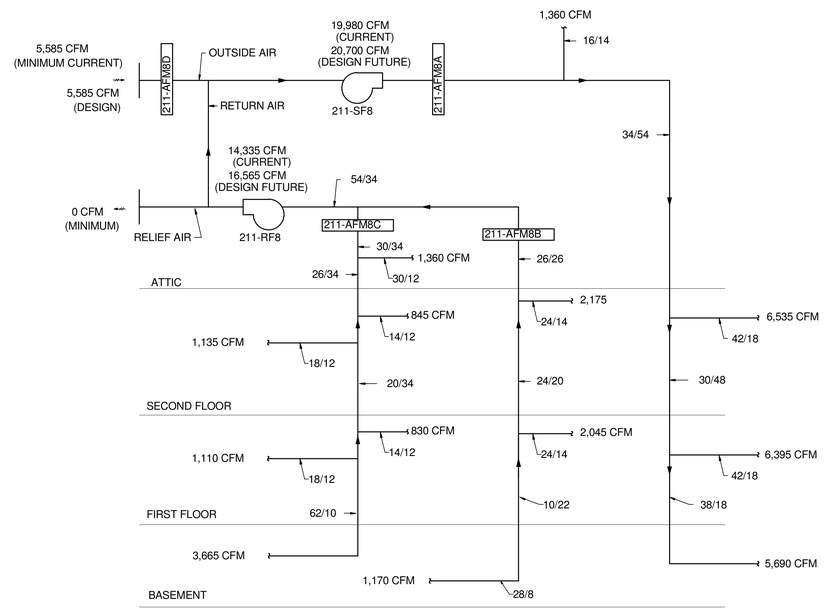

211-AHU8 SYSTEM AIR FLOW DIAGRAM

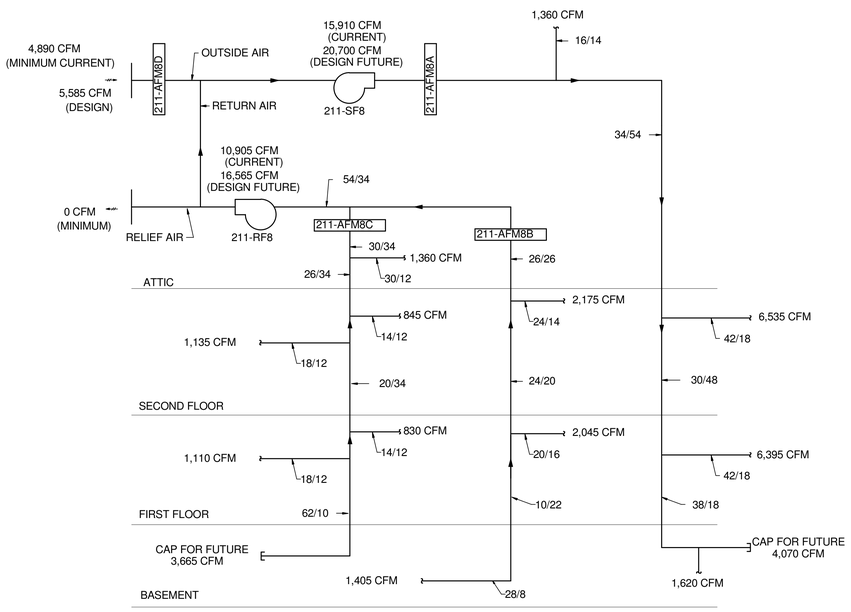

211-AHU8 SYSTEM AIR FLOW DIAGRAM - DEDUCT ALTERNATE

Revisions	Date

CONSULTANTS:

Heapy Engineering
Mechanical Electrical Commissioning Technology
Nationally Recognized Leader in Sustainability / LEED
1400 W Dorothy Lane, Dayton OH 45409-1310
Ph: 937-224-0861 Fax: 937-224-5777 www.heapy.com
PROJECT NO. 2010-04024 FIRM LICENSE NO. 01528

STATE OF OHIO — JOHN A. BLACK 49341 — REGISTERED PROFESSIONAL ENGINEER

ARCHITECT/ENGINEERS:

JOHN POE ARCHITECTS
116 EAST THIRD STREET
DAYTON, OHIO
45402-2130
937 461 3290 PHONE
937 461 0260 FAX
jpa@johnpoe.com

Drawing Title: AIR FLOW DIAGRAMS

Approved: Project Director

Project Title: RENOVATE CLC BUILDING 211 WEST

Location: Chillicothe, Ohio

Date: 09/06/2013 | Checked: JAC | Drawn: TEG

Project No. VA Project No. 538-107 JPA Project No. 11001.00

Building Number: 211

Drawing Number: H13

Dwg. 06 of 132

Office of Construction and Facilities Management

Department of Veterans Affairs

9/6/2013 1:30:50 PM

FULLY SPRINKLERED

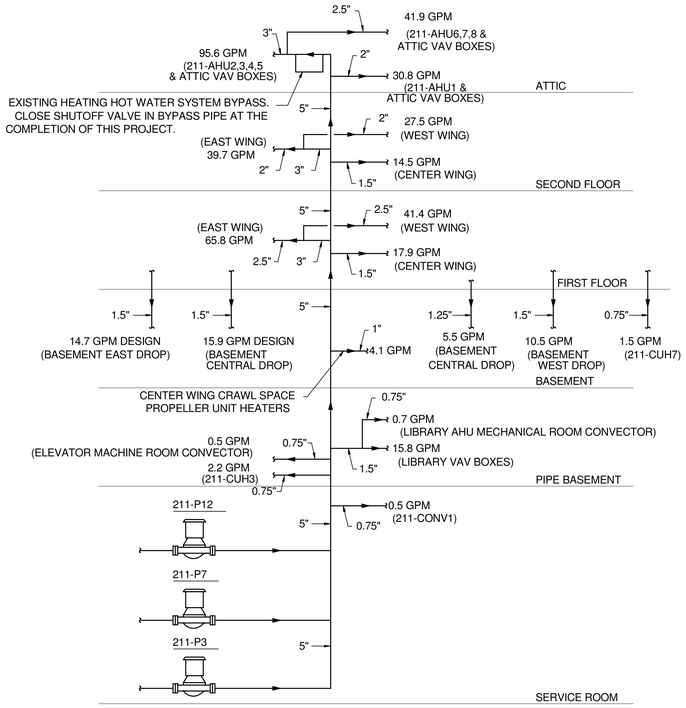

211-P3, P7, P12 SYSTEM HEATING HOT WATER FLOW DIAGRAM

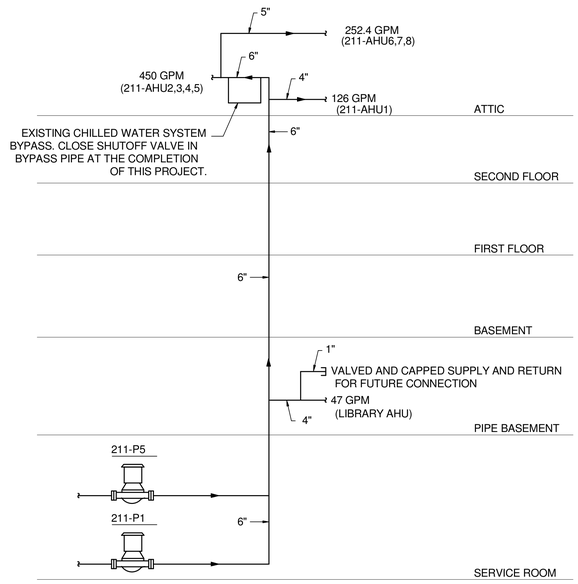

211-P1 & 211-P5 SYSTEM CHILLED WATER FLOW DIAGRAM

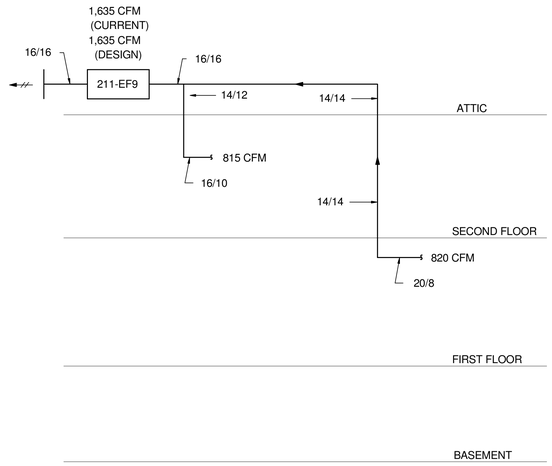

211-EF9 AIR FLOW DIAGRAM

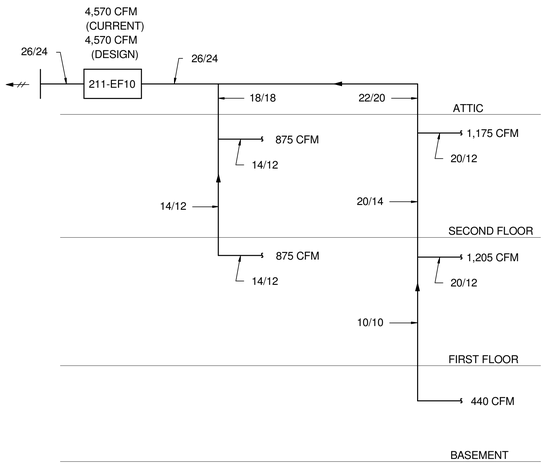

211-EF10 AIR FLOW DIAGRAM

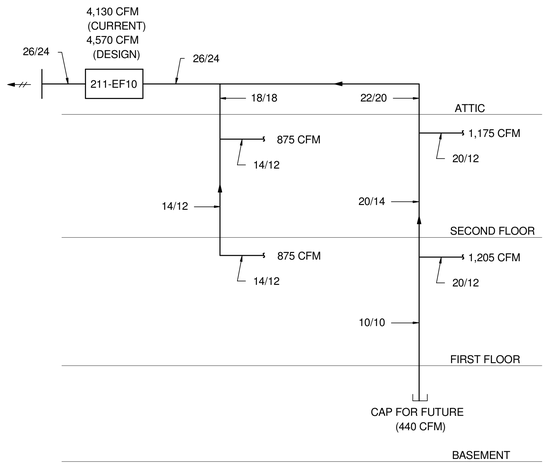

211-EF10 AIR FLOW DIAGRAM - DEDUCT ALTERNATE

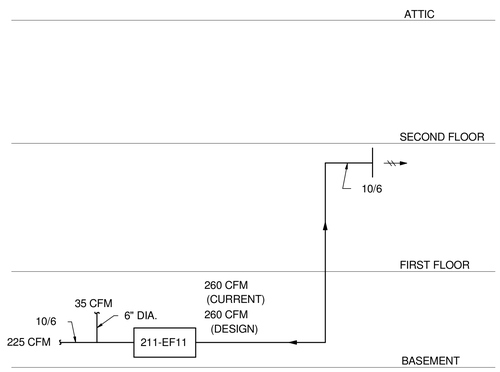

211-EF11 AIR FLOW DIAGRAM

Revisions	Date

CONSULTANTS:

Heapy Engineering
Mechanical Electrical Commissioning Technology
Nationally Recognized Leader in Sustainability / LEED
1400 W Dorothy Lane, Dayton OH 45409-1310
Ph: 937-224-0861 Fax: 937-224-5777 www.heapy.com
PROJECT NO. 2010-04024 FIRM LICENSE NO. 01528

STATE OF OHIO — JOHN A. BLACK 49341 — REGISTERED PROFESSIONAL ENGINEER

ARCHITECT/ENGINEERS:

JOHN POE ARCHITECTS
116 EAST THIRD STREET
DAYTON, OHIO
45402-2130
937 461 3290 PHONE
937 461 0260 FAX
jpa@johnpoe.com

Drawing Title: AIR AND WATER FLOW DIAGRAMS

Approved: Project Director

Project Title: RENOVATE CLC BUILDING 211 WEST

Location: Chillicothe, Ohio

Date: 09/06/2013 | Checked: JAC | Drawn: TEG

Project No.: VA Project No. 538-107; JPA Project No. 11001.00

Building Number: 211

Drawing Number: H14

Dwg. 87 of 132

Office of Construction and Facilities Management
Department of Veterans Affairs

9/6/2013 1:30:51 PM

FULLY SPRINKLERED

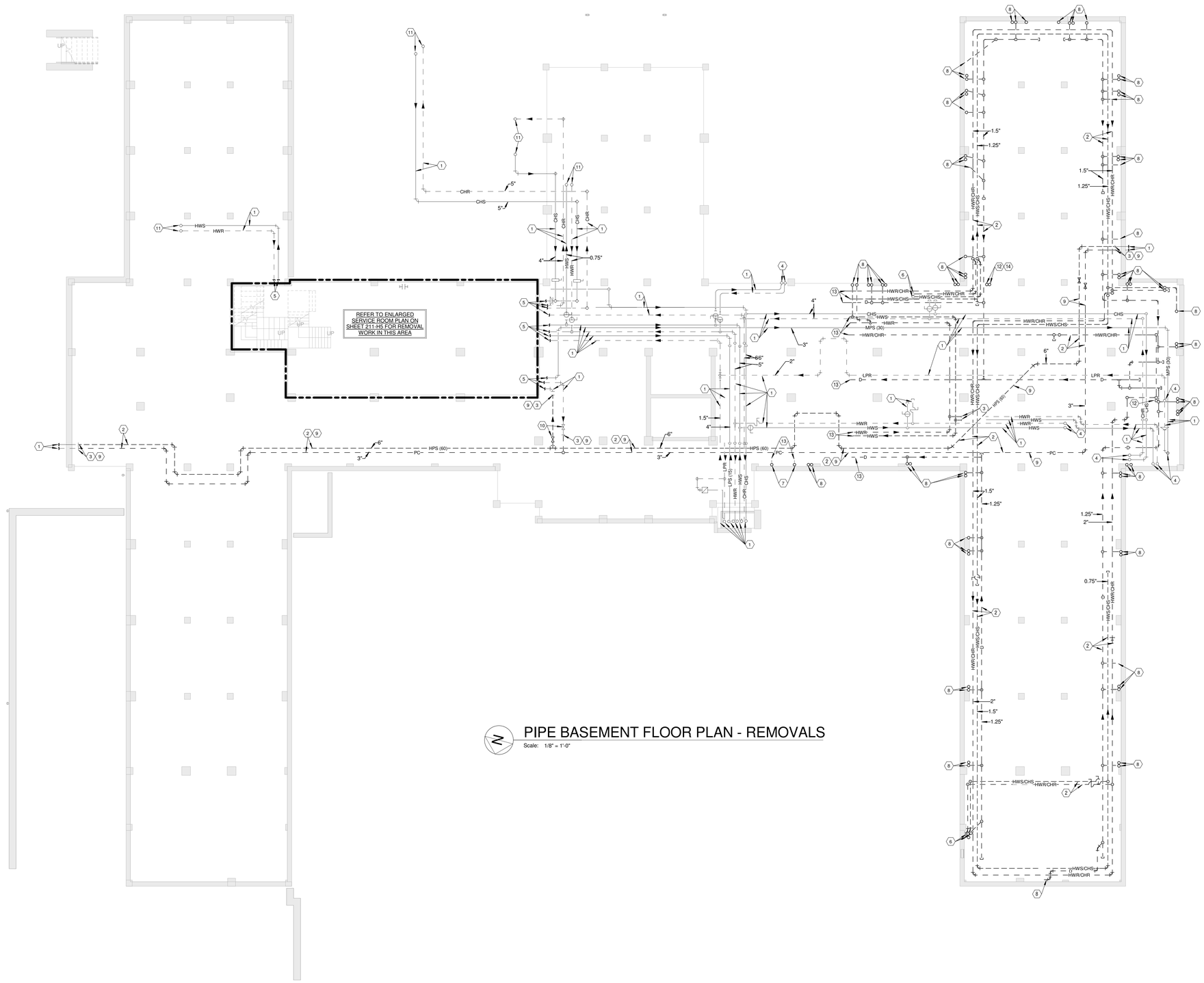

PIPE BASEMENT FLOOR PLAN - REMOVALS

Scale: 1/8" = 1'-0"

GENERAL NOTES

A REFER TO SHEET H1 FOR LEGEND, ABBREVIATIONS AND ADDITIONAL GENERAL NOTES.

B ALL EXISTING DUCTWORK, PIPING, EQUIPMENT, CONTROLS, ETC. SHOWN DASHED SHALL BE REMOVED. THE MAJORITY OF WORK TO BE REMOVED IS SHOWN. REMOVE ALL INCIDENTAL ABANDONED DUCTWORK, PIPING, ETC., THAT MAY NOT BE SHOWN BUT IS ASSOCIATED WITH THE REMOVAL WORK. THIS INCLUDES CONDENSATE DRAIN PIPING ASSOCIATED WITH FAN COIL UNIT REMOVALS, AND ABANDONED STEAM AND CONDENSATE PIPING ASSOCIATED WITH THE REMOVAL OF THE CAST IRON RADIATORS.

NOTES

1 EXISTING PIPING TO REMAIN.

2 REMOVE EXISTING PIPING AND ASSOCIATED PIPING RUNOUTS, VALVES, SUPPORTS, ETC..

3 REMOVE EXISTING PIPING TO THIS POINT FOR RECONNECTION IN NEW WORK.

4 EXISTING PIPING UP TO BASEMENT LEVEL TO REMAIN. REFER TO BASEMENT REMOVAL PLAN ON SHEET 211-H2 FOR CONTINUATION.

5 REFER TO ENLARGED SERVICE ROOM PLANS ON SHEET 211-H5 FOR CONTINUATION.

6 REMOVE EXISTING PIPING AND ASSOCIATED SUPPORTS, VALVES, ETC. SERVING FAN COIL UNIT ON FLOOR ABOVE, TO UNDERSIDE OF BASEMENT FLOOR SLAB AND CAP.

7 REMOVE EXISTING PIPING AND ASSOCIATED SUPPORTS, VALVES, ETC. SERVING HOT WATER CONVECTOR ON FLOOR ABOVE. REFER TO SHEET 211-H2 FOR CONTINUATION.

8 REMOVE EXISTING CONDENSATE DRAIN AND ABANDONED STEAM, HEATING HOT WATER, AND COMBINATION HOT/CHILLED WATER PIPING AND ASSOCIATED SUPPORTS, VALVES, ETC, TO UNDERSIDE OF BASEMENT FLOOR SLAB AND CAP.

9 REMOVAL OF STEAM AND CONDENSATE MAINS THROUGH PIPE BASEMENT SHALL NOT OCCUR UNTIL NEW MAINS ARE INSTALLED, TO MINIMIZE DOWNTIME AND ALLOW QUICK SWITCH OVER FROM EXISTING TO NEW PIPING. REFER TO PIPE BASEMENT NEW PLAN ON SHEET 211-H6 FOR SCOPE OF NEW WORK ASSOCIATED WITH THESE MAINS.

10 IF STEAM AND CONDENSATE BUILDING SHUTOFF VALVES ARE REQUIRED TO BE REMOVED IN THE COURSE OF PIPING REMOVAL WORK SHOWN, REINSTALL VALVES IN NEW PIPING - REFER TO SHEET 211-H6 FOR NEW WORK PLAN.

11 EXISTING PIPING UP TO BASEMENT LEVEL TO REMAIN.

12 REFER TO BASEMENT REMOVAL PLAN ON SHEET 211-H2 FOR CONTINUATION.

13 OPEN END PIPE/DUCT - REMOVED TO THIS POINT UNDER PREVIOUS PHASE OF PROJECT.

14 REMOVE EXISTING ABANDONED STEAM AND CONDENSATE PIPING UP THRU FLOOR, SERVING CAST IRON RADIATOR ON FLOOR ABOVE.

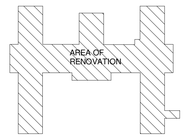

PIPE BASEMENT KEYPLAN

Scale: N.T.S.

Revisions	Date

CONSULTANTS:

Heapy Engineering
Mechanical Electrical Commissioning Technology
Nationally Recognized Leader in Sustainability / LEED
1400 W Dorothy Lane, Dayton OH 45409-1310
Ph: 937-224-0861 Fax: 937-224-5777 www.heapy.com
PROJECT NO. 2010-04024 FIRM LICENSE NO. 01528

STATE OF OHIO — JOHN A. BLACK 49341 — REGISTERED PROFESSIONAL ENGINEER

ARCHITECT/ENGINEERS:

JOHN POE ARCHITECTS
116 EAST THIRD STREET
DAYTON, OHIO
45402-2130
937 461 3290 PHONE
937 461 0260 FAX
jpa@johnpoe.com

Drawing Title: PIPE BASEMENT FLOOR PLAN - REMOVALS

Approved: Project Director

Project Title: RENOVATE CLC BUILDING 211 WEST

Location: Chillicothe, Ohio

Date: 09/06/2013 | Checked: JAC | Drawn: TEG

Project No. VA Project No. 538-107 JPA Project No. 11001.00

Building Number: 211

Drawing Number: 211-H1

Dwg. 68 of 132

Office of Construction and Facilities Management

Department of Veterans Affairs

9/6/2013 1:27:34 PM

FULLY SPRINKLERED

GENERAL NOTES

A REFER TO SHEET H1 FOR LEGEND, ABBREVIATIONS AND ADDITIONAL GENERAL NOTES.

B ALL EXISTING DUCTWORK, PIPING, EQUIPMENT, CONTROLS, ETC. SHOWN DASHED SHALL BE REMOVED. THE MAJORITY OF WORK TO BE REMOVED IS SHOWN. REMOVE ALL INCIDENTAL ABANDONED DUCTWORK, PIPING, ETC., THAT MAY NOT BE SHOWN BUT IS ASSOCIATED WITH THE REMOVAL WORK.

C CAREFULLY COORDINATE WORK IN COFFEE BISTRO, LIBRARY SUPPORT AREAS, AND OTHER OCCUPIED BASEMENT SPACES WITH COTR WELL IN ADVANCE OF PERFORMING WORK IN THESE AREAS. THIS WORK WILL NEED TO BE ACCOMPLISHED WHEN THESE AREAS ARE NOT IN OPERATION WHICH IS EITHER WEEKENDS OR WEEK NIGHTS.

NOTES

1 EXISTING PIPING TO REMAIN.

2 REMOVE EXISTING PIPING AND ASSOCIATED PIPING RUNOUTS, VALVES, SUPPORTS, ETC.

3 REMOVE EXISTING DUCTWORK AND ASSOCIATED DAMPERS, ACCESSORIES, SUPPORTS, ETC.

4 REMOVE EXISTING AIR DEVICE AND ASSOCIATED RUNOUT DUCTWORK, DAMPERS, SUPPORTS. ETC.

5 EXISTING SPLIT SYSTEM AIR CONDITIONING UNIT AND ASSOCIATED REFRIGERANT PIPING, WIRING, CONTROLS, ETC. TO REMAIN.

6 REMOVE EXISTING HOT WATER CABINET CONVECTOR AND ASSOCIATED PIPING, CONTROLS, ETC. THRU FLOOR SLAB. PATCH OPENINGS IN SLAB TO MATCH EXISTING. COORDINATE WITH G.C. REFER TO SHEET 211-H1 FOR CONTINUATION.

7 EXISTING SPLIT SYSTEM EVAPORATOR DRAIN PIPING TO REMAIN.

8 EXISTING HOT WATER CABINET CONVECTOR TO REMAIN.

9 REFER TO PIPE BASEMENT REMOVAL PLAN ON SHEET 211-H1 FOR CONTINUATION.

10 REMOVE EXISTING PIPING TO THIS POINT. DRAIN ALL ABANDONED PIPING THAT IS TO REMAIN AND LEAVE ENDS OPEN AT THIS POINT.

11 REMOVE EXISTING WALL COVER, RECESSED CAST IRON RADIATOR AND ASSOCIATED RUNOUT PIPING, SUPPORTS, ACCESSORIES, ETC. TURN WALL COVER OVER TO G.C. COORDINATE REMOVAL WITH ANY REQUIRED ASBESTOS ABATEMENT. PATCH OPENINGS IN SLAB TO MATCH EXISTING, PRIOR TO INSULATION OF WALL RECESS AND REINSTALLATION OF EXISTING WALL COVER BY G.C. COORDINATE WITH G.C.

12 EXISTING DUCTWORK TO REMAIN.

13 REMOVE EXISTING HOT WATER CABINET CONVECTOR AND ASSOCIATED PIPING, CONTROLS, ETC.

14 REMOVE EXISTING PIPING AND ASSOCIATED SUPPORTS, VALVES, ETC. SERVING CONVECTOR ON FLOOR ABOVE. REFER TO SHEET 211-H3 FOR CONTINUATION.

15 EXISTING CEILING MOUNTED ELECTRIC UNIT HEATER TO REMAIN.

16 EXISTING PIPING TO BE ABANDONED IN PLACE.

17 OPEN END PIPE/DUCT - REMOVED TO THIS POINT UNDER PREVIOUS PHASE OF PROJECT.

18 EXISTING EQUIPMENT IN THIS ROOM SERVING LIBRARY IS EXISTING TO REMAIN.

19 REMOVE EXISTING FILTER GRILLE. INSTALL NEW CEILING TILE IN ITS PLACE TO MATCH EXISTING.

20 REMOVE DUCTWORK TO THIS POINT AND CAP, ENSURE AIRTIGHT SEAL.

21 ALL HVAC SYSTEMS IN THIS ROOM ARE EXISTING TO REMAIN (NO REMOVAL SCOPE). REFER TO BASEMENT NEW WORK PLANS ON SHEETS 211-H7 & 211-H8 FOR SCOPE OF WORK IN THIS AREA.

22 EXISTING AIR DEVICE TO REMAIN.

23 REMOVE EXISTING TWO-PIPE FAN COIL UNIT SUSPENDED ABOVE CEILING AND ASSOCIATED DUCTWORK, THERMOSTAT, PIPING, WIRING, SUPPORTS, CONTROLS, ETC. AND TURN OVER TO COTR.

24 REMOVE DUCTWORK TO THIS POINT FOR RECONNECTION IN NEW WORK.

25 REMOVE PIPING BACK TO THIS POINT AND CAP.

26 CAREFULLY REMOVE EXISTING CEILING, CEILING GRID, ETC. AS REQUIRED TO PERFORM HVAC WORK. RE-INSTALL IN NEW WORK, REPLACE MATERIALS AS REQUIRED TO MATCH EXISTING.

27 IF REQUIRED FOR HVAC REMOVAL AND NEW WORK IN THIS AREA, REMOVE, CLEAN AND STORE EXISTING SUPPLY AIR DEVICE FOR RE-INSTALLATION IN NEW WORK.

28 REFER TO PARTIAL FIRST FLOOR REMOVAL PLAN ON SHEET 211-H3 FOR CONTINUATION.

29 EXISTING CONDENSATE DRAIN AND ABANDONED STEAM PIPE RISERS TO REMAIN. REFER TO SHEETS 211-H1 AND 211-H3 FOR CONTINUATION.

30 EXISTING STEAM, CHILLED WATER, AND HEATING HOT WATER PIPING SERVING LIBRARY TO REMAIN. REFER TO PIPE BASEMENT REMOVAL PLAN ON SHEET 211-H1 FOR CONTINUATION.

31 REMOVE EXISTING PIPING AND ASSOCIATED SUPPORTS, VALVES, ETC. SERVING FAN COIL UNIT ON FLOOR ABOVE. REFER TO SHEET 211-H3 FOR CONTINUATION.

32 REMOVE AND CLEAN AIR DEVICE FOR REINSTALLATION IN NEW WORK. REFER TO SHEET 211-H7 FOR NEW LOCATION.

33 EXISTING VAV BOX TO REMAIN.

34 REMOVE EXISTING TRANSFER DUCT THROUGH WALL FOR RELOCATION IN NEW WORK. PATCH WALL OPENING TO MATCH EXISTING. REFER TO SHEET 211-H7 FOR NEW LOCATION.

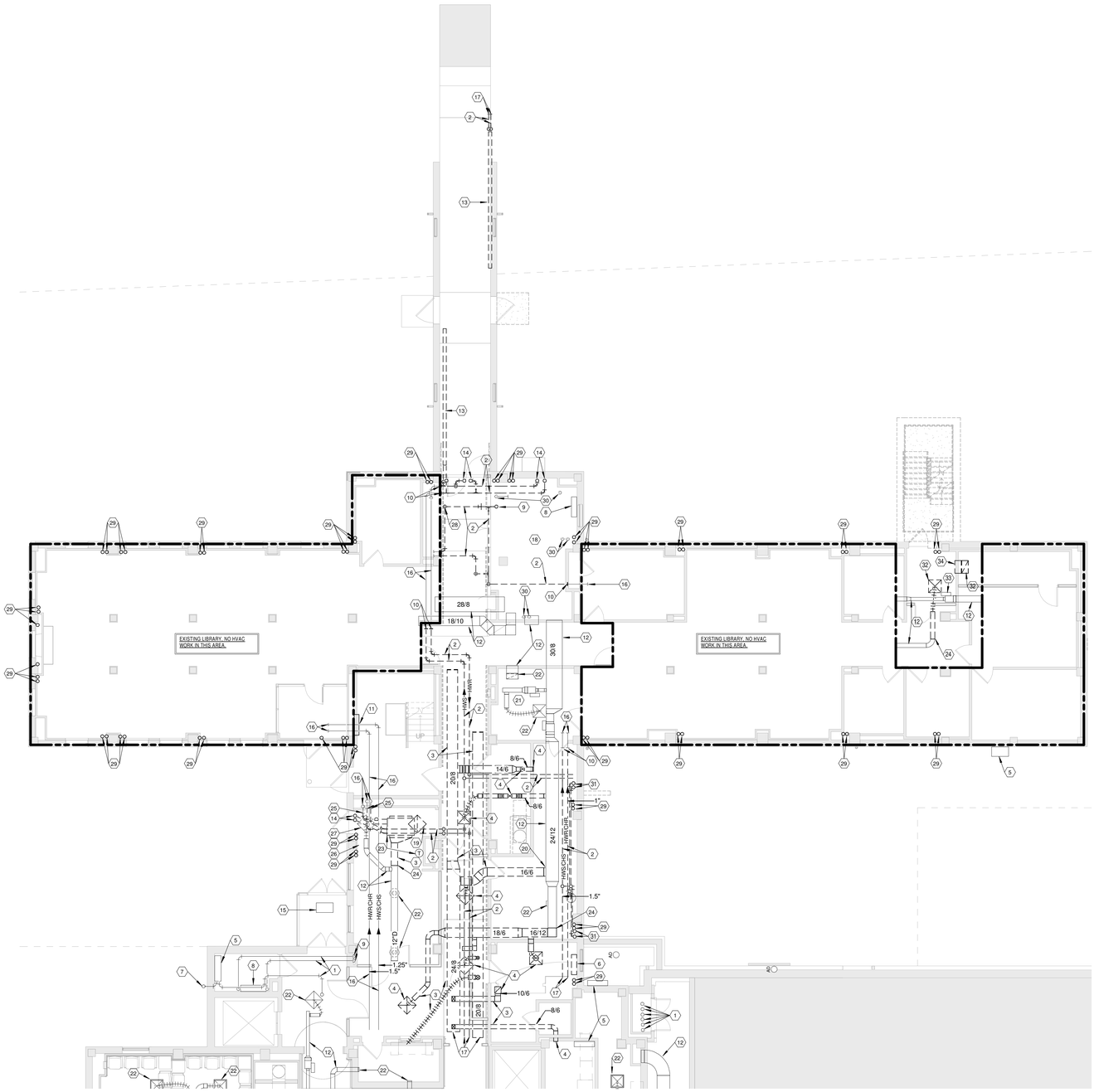

N

PARTIAL BASEMENT FLOOR PLAN - REMOVALS

Scale: 1/8" = 1'-0"

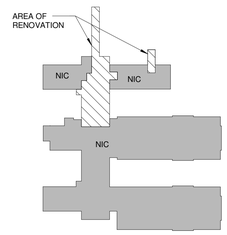

BASEMENT REMOVALS KEYPLAN

Scale: N.T.S.

Revisions	Date

CONSULTANTS:

Heapy Engineering
Mechanical Electrical Commissioning Technology
Nationally Recognized Leader in Sustainability / LEED
1400 W Dorothy Lane, Dayton OH 45409-1310
Ph: 937-224-0861 Fax: 937-224-5777 www.heapy.com
PROJECT NO. 2010-04024 FIRM LICENSE NO. 01528

STATE OF OHIO — JOHN A. BLACK 49341 — REGISTERED PROFESSIONAL ENGINEER

ARCHITECT/ENGINEERS:

JOHN POE ARCHITECTS
116 EAST THIRD STREET
DAYTON, OHIO
45402-2130
937 461 3290 PHONE
937 461 0260 FAX
jpa@johnpoe.com

Drawing Title: PARTIAL BASEMENT FLOOR PLAN - REMOVALS

Approved: Project Director

Project Title: RENOVATE CLC BUILDING 211 WEST

Location: Chillicothe, Ohio

Date: 09/06/2013 | Checked: JAC | Drawn: TEG

Project No. VA Project No. 538-107 JPA Project No. 11001.00

Building Number: 211

Drawing Number: 211-H2

Dwg. 89 of 132

Office of Construction and Facilities Management

Department of Veterans Affairs

9/6/2013 1:27:41 PM

FULLY SPRINKLERED

GENERAL NOTES

A REFER TO SHEET H1 FOR LEGEND, ABBREVIATIONS AND ADDITIONAL GENERAL NOTES.

B ALL EXISTING DUCTWORK, PIPING, EQUIPMENT, CONTROLS, ETC. SHOWN DASHED SHALL BE REMOVED. THE MAJORITY OF WORK TO BE REMOVED IS SHOWN. REMOVE ALL INCIDENTAL ABANDONED DUCTWORK, PIPING, ETC., THAT MAY NOT BE SHOWN BUT IS ASSOCIATED WITH THE REMOVAL WORK.

NOTES

1 EXISTING PIPING TO REMAIN.

2 REMOVE EXISTING PIPING AND ASSOCIATED PIPING RUNOUTS, VALVES, SUPPORTS, ETC.

3 REMOVE EXISTING DUCTWORK AND ASSOCIATED DAMPERS, ACCESSORIES, SUPPORTS, ETC.

4 REMOVE EXISTING AIR DEVICE AND ASSOCIATED RUNOUT DUCTWORK, DAMPERS, SUPPORTS. ETC.

5 WORK IN THIS AREA IS EXISTING TO REMAIN. NO HVAC NEW WORK SCOPE IN THIS AREA.

6 REMOVE EXISTING HOT WATER CABINET CONVECTOR AND ASSOCIATED PIPING, CONTROLS, ETC, THRU FLOOR SLAB. PATCH OPENINGS IN SLAB TO MATCH EXISTING PRIOR TO INSTALLATION OF NEW FLOORING. COORDINATE WITH G.C. REFER TO SHEET 211-H2 FOR CONTINUATION.

7 REMOVE EXISTING WINDOW MOUNTED PROPELLER EXHAUST FAN AND ASSOCIATED CONTROLS, ETC. TURN OVER TO COTR.

8 REMOVE EXISTING CONDENSATE DRAIN AND ABANDONED STEAM PIPE RISERS AND ASSOCIATED RUNOUT PIPING, VALVES, SUPPORTS, ETC. COORDINATE REMOVAL WITH ANY REQUIRED ASBESTOS ABATEMENT. REMOVE RISERS TO FLUSH WITH EXISTING FIRST FLOOR SLAB, AND PATCH OPENINGS TO MATCH EXISTING AS REQUIRED FOR INSTALLATION OF NEW FLOORING. COORDINATE WITH G.C. REFER TO SHEETS 211-H2 AND 211-H4 FOR CONTINUATION.

9 REMOVE EXISTING WALL COVER, RECESSED CAST IRON RADIATOR AND ASSOCIATED RUNOUT PIPING, SUPPORTS, ACCESSORIES, ETC. COORDINATE REMOVAL WITH ANY REQUIRED ASBESTOS ABATEMENT. PATCH OPENINGS IN SLAB TO MATCH EXISTING, PRIOR TO INSULATION OF WALL RECESS AND INSTALLATION OF NEW WALL. COORDINATE WITH G.C.

10 REFER TO PARTIAL BASEMENT REMOVAL PLAN ON SHEET 211-H2 FOR CONTINUATION.

11 REMOVE EXISTING PIPING AND ASSOCIATED SUPPORTS, VALVES, ETC. SERVING FAN COIL UNIT ON FLOOR ABOVE. REFER TO SHEET 211-H4 FOR CONTINUATION.

12 REMOVE EXISTING PIPING AND ASSOCIATED SUPPORTS, VALVES, ETC. SERVING CONVECTOR ON FLOOR ABOVE. REFER TO SHEET 211-H4 FOR CONTINUATION.

13 REMOVE EXISTING FAN COIL UNIT AND ASSOCIATED PIPING, WIRING, CONTROLS, ETC. REMOVE PIPING RUNOUTS TO FLUSH WITH EXISTING FIRST FLOOR SLAB, AND PATCH OPENINGS TO MATCH EXISTING AS REQUIRED FOR INSTALLATION OF NEW FLOORING - COORDINATE WITH G.C.

14 EXISTING CONDENSATE DRAIN AND ABANDONED STEAM PIPE RISERS TO REMAIN. REFER TO SHEET 211-H2 FOR CONTINUATION.

15 OPEN END PIPE/DUCT - REMOVED TO THIS POINT UNDER PREVIOUS PHASE OF PROJECT.

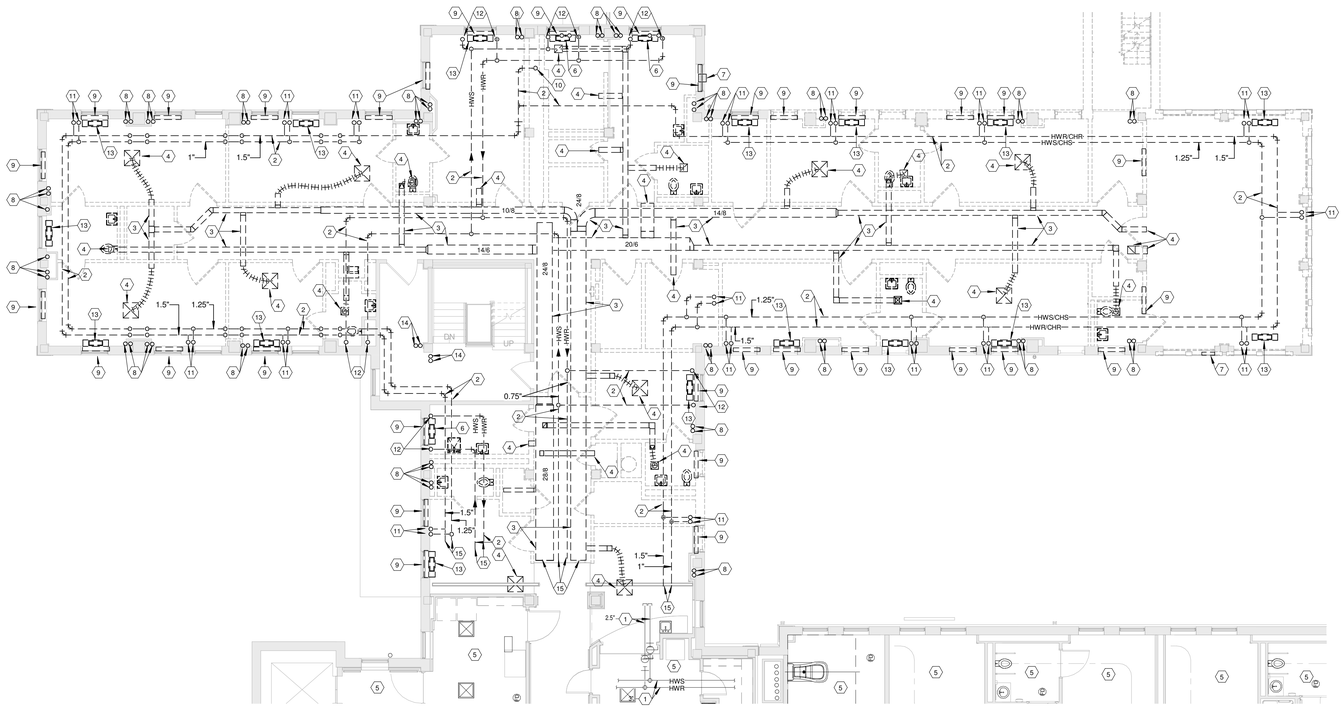

PARTIAL FIRST FLOOR PLAN - REMOVALS

Scale: 1/8" = 1'-0"

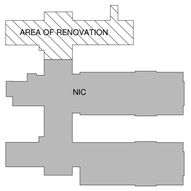

FIRST FLOOR REMOVALS KEYPLAN

Scale: N.T.S.

Revisions	Date

CONSULTANTS:

Heapy Engineering
Mechanical Electrical Commissioning Technology
Nationally Recognized Leader in Sustainability / LEED
1400 W Dorothy Lane, Dayton OH 45409-1310
Ph: 937-224-0861 Fax: 937-224-5777 www.heapy.com
PROJECT NO. 2010-04024 FIRM LICENSE NO. 01528

STATE OF OHIO — JOHN A. BLACK 49341 — REGISTERED PROFESSIONAL ENGINEER

ARCHITECT/ENGINEERS:

JOHN POE ARCHITECTS
116 EAST THIRD STREET
DAYTON, OHIO
45402-2130
937 461 3290 PHONE
937 461 0260 FAX
jpa@johnpoe.com

Drawing Title: PARTIAL FIRST FLOOR PLAN - REMOVALS

Approved: Project Director

Project Title: RENOVATE CLC BUILDING 211 WEST

Location: Chillicothe, Ohio

Date: 09/06/2013 | Checked: JAC | Drawn: TEG

Project No. VA Project No. 538-107 JPA Project No. 11001.00

Building Number: 211

Drawing Number: 211-H3

Dwg. 90 of 132

Office of Construction and Facilities Management

Department of Veterans Affairs

9/6/2013 1:27:49 PM

FULLY SPRINKLERED

GENERAL NOTES

A REFER TO SHEET H1 FOR LEGEND, ABBREVIATIONS AND ADDITIONAL GENERAL NOTES.

B ALL EXISTING DUCTWORK, PIPING, EQUIPMENT, CONTROLS, ETC. SHOWN DASHED SHALL BE REMOVED. THE MAJORITY OF WORK TO BE REMOVED IS SHOWN. REMOVE ALL INCIDENTAL ABANDONED DUCTWORK, PIPING, ETC.. THAT MAY NOT BE SHOWN BUT IS ASSOCIATED WITH THE REMOVAL WORK.

NOTES

1 EXISTING PIPING TO REMAIN.

2 REMOVE EXISTING DUCTWORK AND ASSOCIATED DAMPERS, ACCESSORIES, SUPPORTS, ETC.

3 REMOVE EXISTING AIR DEVICE AND ASSOCIATED RUNOUT DUCTWORK, DAMPERS, SUPPORTS. ETC.

4 REMOVE EXISTING FAN COIL UNIT AND ASSOCIATED PIPING, WIRING, CONTROLS, ETC. THRU FLOOR SLAB. PATCH OPENINGS IN SLAB TO MATCH EXISTING, PRIOR TO INSTALLATION OF NEW FLOORING. COORDINATE WITH G.C. REFER TO SHEET 211-H3 FOR CONTINUATION.

5 REMOVE EXISTING HOT WATER CABINET CONVECTOR AND ASSOCIATED PIPING, CONTROLS, ETC. THRU FLOOR SLAB. PATCH OPENINGS IN SLAB TO MATCH EXISTING PRIOR TO INSTALLATION OF NEW FLOORING. COORDINATE WITH G.C. REFER TO SHEET 211-H3 FOR CONTINUATION.

6 REMOVE EXISTING WINDOW MOUNTED PROPELLER EXHAUST FAN AND ASSOCIATED CONTROLS, ETC. TURN OVER TO COTR.

7 REMOVE EXISTING WALL COVER, RECESSED CAST IRON RADIATOR AND ASSOCIATED RUNOUT PIPING, SUPPORTS, ACCESSORIES, ETC. COORDINATE REMOVAL WITH ANY REQUIRED ASBESTOS ABATEMENT. PATCH OPENINGS IN SLAB TO MATCH EXISTING, PRIOR TO INSULATION OF WALL RECESS AND INSTALLATION OF NEW WALL. COORDINATE WITH G.C.

8 REMOVE EXISTING FLEXIBLE EXHAUST DUCT ASSOCIATED WITH DRYER.

9 EXISTING CLOTHES DRYER TO BE REMOVED BY OTHERS.

10 WORK IN THIS AREA IS EXISTING TO REMAIN. NO HVAC NEW WORK SCOPE IN THIS AREA.

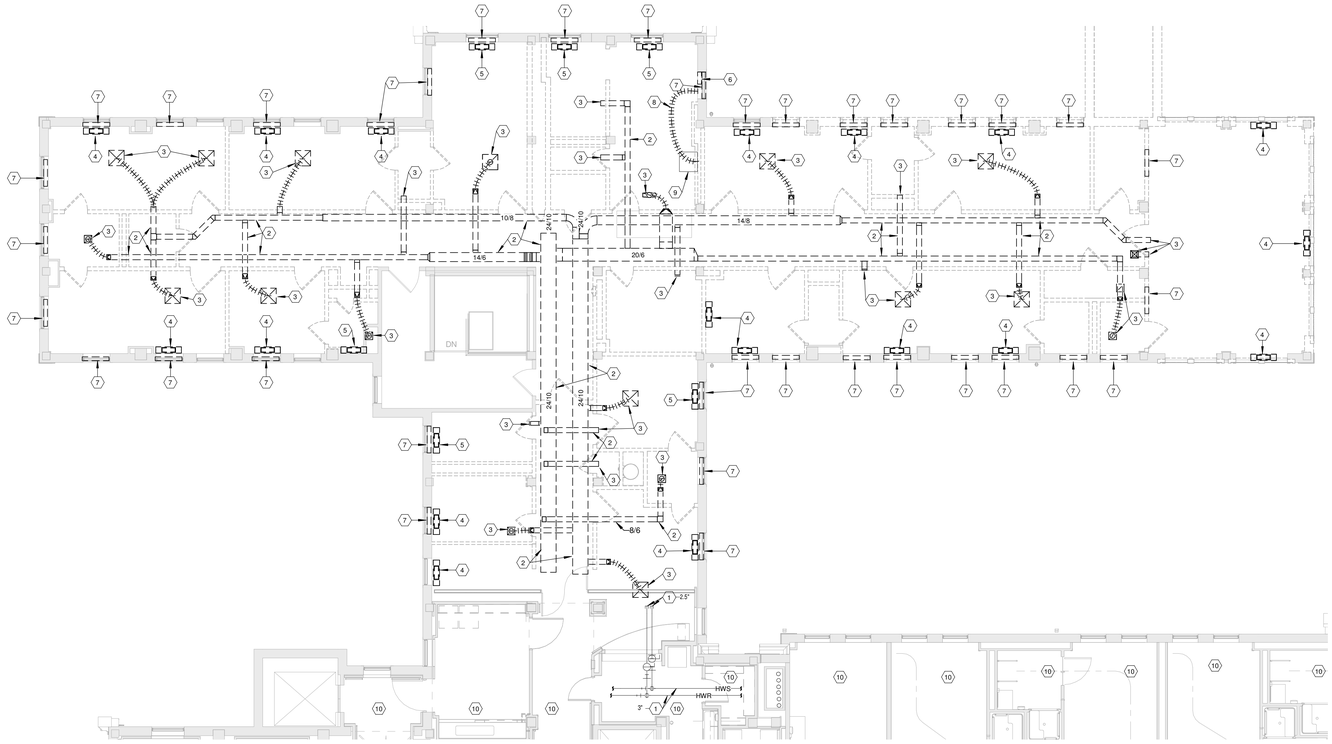

PARTIAL SECOND FLOOR PLAN - REMOVALS

Scale: 1/8" = 1'-0"

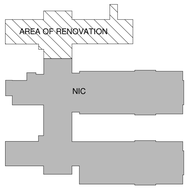

SECOND FLOOR REMOVALS KEYPLAN

Scale: N.T.S.

Revisions	Date

CONSULTANTS:

Heapy Engineering
Mechanical Electrical Commissioning Technology
Nationally Recognized Leader in Sustainability / LEED
1400 W Dorothy Lane, Dayton OH 45409-1310
Ph: 937-224-0861 Fax: 937-224-5777 www.heapy.com
PROJECT NO. 2010-04024 FIRM LICENSE NO. 01528

STATE OF OHIO — JOHN A. BLACK 49341 — REGISTERED PROFESSIONAL ENGINEER

ARCHITECT/ENGINEERS:

JOHN POE ARCHITECTS
116 EAST THIRD STREET
DAYTON, OHIO
45402-2130
937 461 3290 PHONE
937 461 0290 FAX
jpa@johnpoe.com

Drawing Title: PARTIAL SECOND FLOOR PLAN - REMOVALS

Approved: Project Director

Project Title: RENOVATE CLC BUILDING 211 WEST

Location: Chillicothe, Ohio

Date: 09/06/2013 | Checked: JAC | Drawn: TEG

Project No. VA Project No. 538-107 JPA Project No. 11001.00

Building Number: 211

Drawing Number: 211-H4

Dwg. 91 of 132

Office of Construction and Facilities Management

Department of Veterans Affairs

9/6/2013 1:27:56 PM

FULLY SPRINKLERED

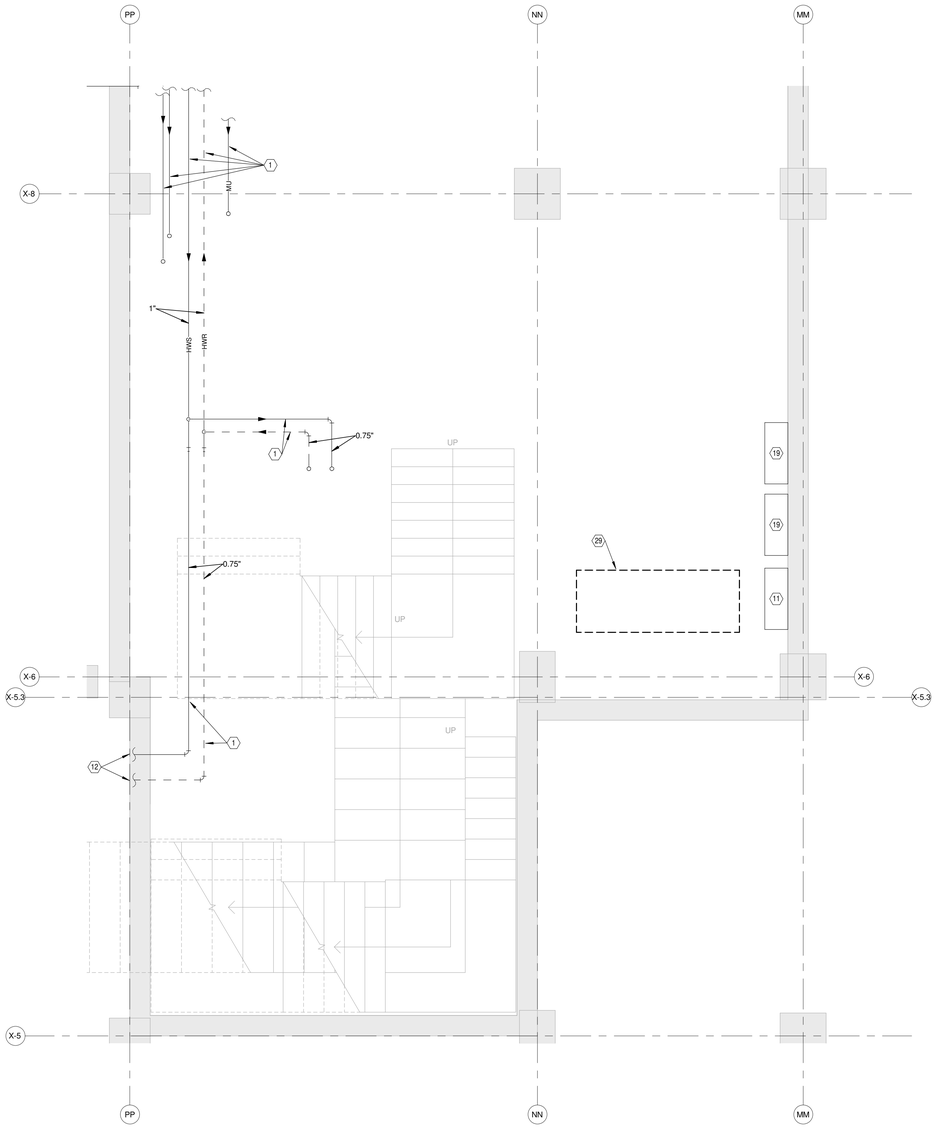

N 2 PARTIAL SERVICE ROOM PLAN - REMOVALS

Scale: 1/2" = 1'-0"

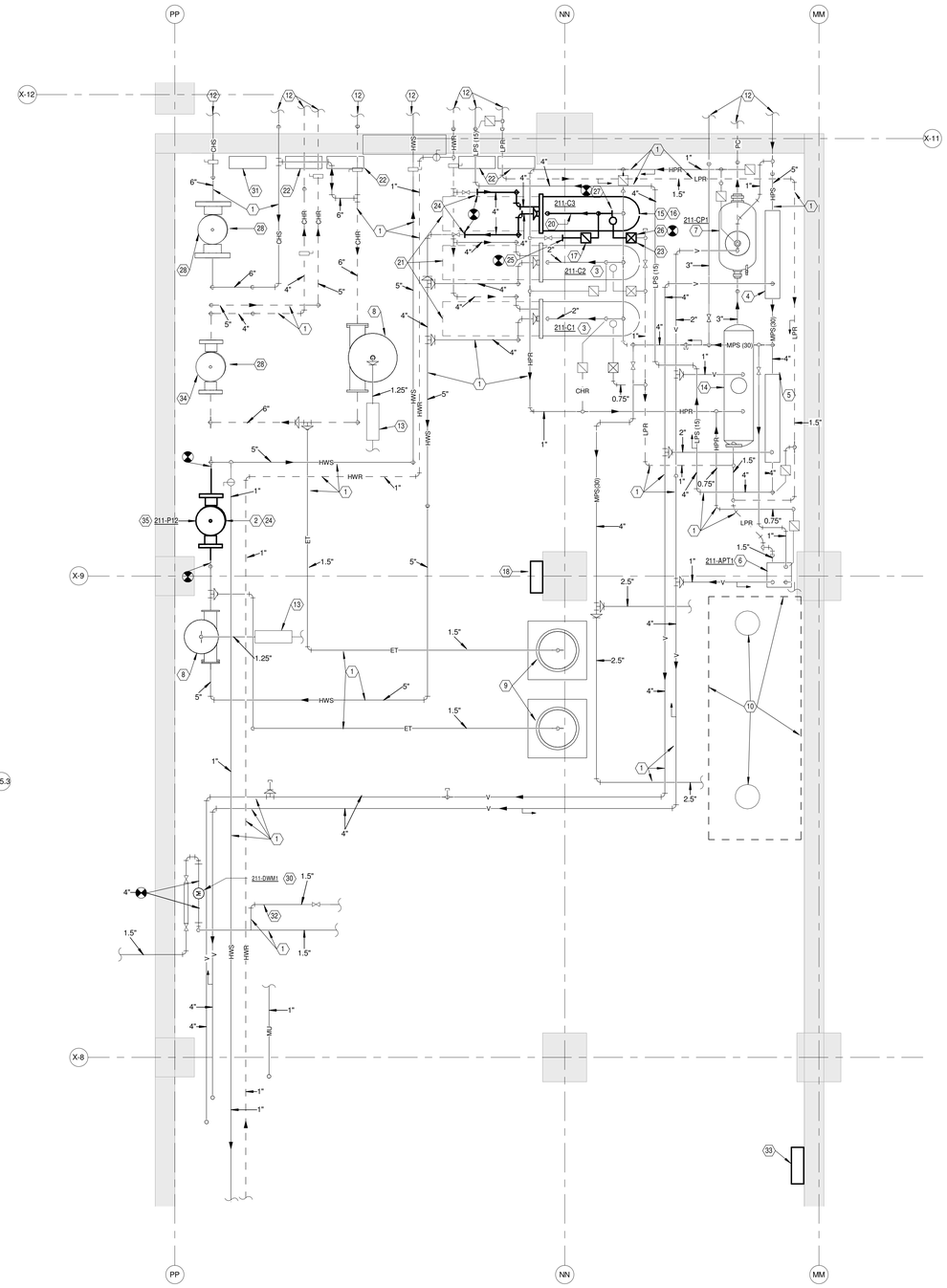

N 1 PARTIAL SERVICE ROOM PLAN - NEW WORK

Scale: 1/2" = 1'-0"

GENERAL NOTES

A REFER TO SHEET H1 FOR LEGEND, ABBREVIATIONS AND ADDITIONAL GENERAL NOTES.

B EXTEND POWER, COMMUNICATIONS, SIGNAL, AND OTHER WIRING REQUIRED TO ACCOMPLISH THE SPECIFIED STRATEGIES AND OBJECTIVES, FROM NEW METERS AND RELAYS TO EXISTING DDC BUILDING CONTROLLER. COORDINATE REQUIREMENTS WITH DEVICE MANUFACTURERS.

C CAREFULLY COORDINATE & SCHEDULE IN ADVANCE WITH COTR, DOWNTIME OF ALL UTILITIES FOR INSTALLATION OF NEW UTILITY METERING DEVICES.

NOTES

1 EXISTING PIPING TO REMAIN.

2 PROVIDE AN ANGLE FRAME TO SUPPORT PUMP AND PIPING OFF OF WALL ABOVE EXISTING PUMP. REFER TO PIPING SCHEMATIC ON SHEET H8 FOR MORE DETAILS.

3 EXISTING STEAM TO HOT WATER CONVERTER TO REMAIN.

4 EXISTING STEAM PRESSURE REDUCING STATION (60 PSIG TO 30 PSIG) TO REMAIN.

5 EXISTING STEAM PRESSURE REDUCING STATION (30 PSIG TO 15 PSIG) TO REMAIN.

6 EXISTING AUTOMATIC PUMP TRAP TO REMAIN.

7 EXISTING STEAM PRESSURE POWERED CONDENSATE PUMP TO REMAIN.

8 EXISTING AIR SEPARATOR TO REMAIN.

9 EXISTING EXPANSION TANK TO REMAIN.

10 EXISTING STEAM SEMI-INSTANTANEOUS DOMESTIC HOT WATER HEATER TO BE REMOVED AND REPLACED WITH NEW BY DIVISION 22. REMOVE AND INSTALL NEW STEAM AND CONDENSATE PIPING AND SPECIALTIES. REFER TO STEAM SYSTEM SCHEMATIC ON SHEET H7.

11 EXISTING NIAGARA AX JACE 600 SERIES BUILDING CONTROLLER TO REMAIN.

12 REFER TO PARTIAL PIPE BASEMENT NEW WORK PLAN ON SHEET 211-H6 FOR CONTINUATION.

13 EXISTING WATER MAKEUP ASSEMBLY TO REMAIN.

14 EXISTING STEAM CONDENSATE RECEIVER TO REMAIN.

15 CONVERTER SHALL BE SUSPENDED HIGH ENOUGH TO ALLOW GRAVITY DRAINAGE OF CONDENSATE TO CONDENSATE RECEIVER ASSOCIATED WITH PRESSURE POWERED CONDENSATE PUMP.

16 PROVIDE SADDLE SUPPORTS AND ANGLE FRAME AND SUPPORT HEAT EXCHANGER OFF FLOOR.

17 STEAM LINE DRIP ASSEMBLY WITH INVERTED BUCKET TRAP. REFER TO DETAIL ON SHEET H6 AND STEAM SYSTEM SCHEMATIC ON SHEET H7.

18 VARIABLE SPEED MOTOR CONTROLLER FOR PUMP 211-P12, REFER TO ELECTRICAL DRAWINGS.

19 INTEGRATE NEW HOT AND CHILLED WATER DDC CONTROL POINTS INTO EXISTING DDC CONTROL PANELS CONTROLLING HEATING HOT WATER AND CHILLED WATER SYSTEMS, RESPECTIVELY. REFER TO SHEET H10 AND SPECIFICATION SECTION 23 09 23 FOR ADDITIONAL INFORMATION.

20 REFER TO STEAM SYSTEM SCHEMATIC ON SHEET H7 FOR 1/3 AND 2/3 CONTROL VALVE PIPING CONNECTIONS TO CONVERTER.

21 MAINTAIN CLEAR AREA FOR TUBE PULL SPACE.

22 EXISTING VARIABLE SPEED MOTOR CONTROLLER TO REMAIN.

23 F & T TRAP ASSEMBLY. REFER TO DETAIL ON SHEET H6 AND STEAM SYSTEM SCHEMATIC ON SHEET H7.

24 REMOVE CAP(S) AND TIE INTO EXISTING HEATING HOT WATER PIPING. REFER TO HOT WATER SYSTEM SCHEMATIC ON SHEET H8.

25 REMOVE CAP AND TIE INTO EXISTING HIGH PRESSURE CONDENSATE RETURN PIPE. REFER TO STEAM SYSTEM SCHEMATIC ON SHEET H7

26 REMOVE CAP AND TIE INTO EXISTING LOW PRESSURE CONDENSATE RETURN PIPE. REFER TO STEAM SYSTEM SCHEMATIC ON SHEET H7.

27 REMOVE CAP AND TIE INTO EXISTING MEDIUM PRESSURE STEAM SUPPLY PIPE. REFER TO STEAM SYSTEM SCHEMATIC ON SHEET H7.

28 EXISTING CHILLED WATER SECONDARY PUMPS 211-P1 AND 211-P5 (STACKED) TO REMAIN.

29 REMOVE EXISTING AUTOMATIC TEMPERATURE CONTROL COMPRESSOR AND ALL ASSOCIATED PIPING, WIRING, ETC. TURN COMPRESSOR OVER TO COTR.

30 PROVIDE NEW DOMESTIC WATER METER IN EXISTING PIPE, UPSTREAM OF ALL BRANCH TAKEOFFS.

31 PROVIDE NEW BTUH METER PER SPECIFICATIONS, TO OPERATE IN CONJUCTION WITH NEW CHILLED WATER DDC PIPE TEMPERATURE SENSORS AND CHILLED WATER FLOW METER.

32 EXISTING PIPE BRANCH WITH BACKFLOW PREVENTER, FOR MECHANICAL SYSTEMS MAKEUP WATER, TO REMAIN.

33 PROVIDE NEW LONWORKS GATEWAY FOR EXISTING YORK AIR-COOLED CHILLER ON GRADE, AND INTEGRATE AVAILABLE INPUT AND OUTPUT POINTS INTO EXISTING BUILDING CONTROLLER SHOWN ON REMOVAL PLAN ON THIS SHEET. REFER TO SPECIFICATION SECTION 23 09 23 FOR REQUIRED INPUT AND OUTPUT VARIABLES TO BE INTEGRATED. REFER TO SHEET 211-H8 FOR CHILLER LOCATION.

34 EXISTING CHILLED WATER PRIMARY PUMPS 211-P2 AND 211-P6 (STACKED) TO REMAIN.

35 EXISTING HEATING HOT WATER SECONDARY PUMPS 211-P3 AND 211-P7 (STACKED BELOW NEW PUMP 211-P12) TO REMAIN.

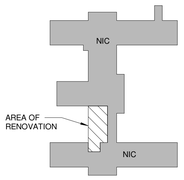

SERVICE ROOM KEYPLAN

Scale: N.T.S.

Revisions	Date

CONSULTANTS:

Heapy Engineering
Mechanical Electrical Commissioning Technology
Nationally Recognized Leader in Sustainability / LEED
1400 W Dorothy Lane, Dayton OH 45409-1310
Ph: 937-224-0861 Fax: 937-224-5777 www.heapy.com
PROJECT NO. 2010-04024 FIRM LICENSE NO. 01528

STATE OF OHIO — JOHN A. BLACK 49341 — REGISTERED PROFESSIONAL ENGINEER

ARCHITECT/ENGINEERS:

JOHN POE ARCHITECTS
116 EAST THIRD STREET
DAYTON, OHIO
45402-2130
937 461 3290 PHONE
937 461 0260 FAX
jpa@johnpoe.com

Drawing Title: ENLARGED SERVICE ROOM FLOOR PLAN - REMOVALS AND NEW WORK

Approved: Project Director

Project Title: RENOVATE CLC BUILDING 211 WEST

Location: Chillicothe, Ohio

Date: 09/06/2013 | Checked: JAC | Drawn: TEG

Project No.: VA Project No. 538-107; JPA Project No. 11001.00

Building Number: 211

Drawing Number: 211-H5

Dwg. 92 of 132

Office of Construction and Facilities Management

Department of Veterans Affairs

9/6/2013 1:28:03 PM

FULLY SPRINKLERED

GENERAL NOTES

A REFER TO SHEET H1 FOR LEGEND, ABBREVIATIONS AND ADDITIONAL GENERAL NOTES.

B EXTEND POWER, COMMUNICATIONS, SIGNAL, AND OTHER WIRING REQUIRED TO ACCOMPLISH THE SPECIFIED STRATEGIES AND OBJECTIVES, FROM NEW METERS AND RELAYS TO EXISTING DDC BUILDING CONTROLLER. COORDINATE REQUIREMENTS WITH DEVICE MANUFACTURERS.

C CAREFULLY COORDINATE & SCHEDULE IN ADVANCE WITH COTR, DOWNTIME OF ALL UTILITIES FOR INSTALLATION OF NEW UTILITY METERING DEVICES.

NOTES

1 EXISTING PIPING TO REMAIN.

2 REFER TO ENLARGED SERVICE ROOM NEW WORK PLAN ON SHEET 211-H5 FOR CONTINUATION.

3 EXISTING PIPING UP TO BASEMENT LEVEL TO REMAIN. REFER TO PARTIAL BASEMENT PIPING PLAN ON SHEET 211-H8 FOR CONTINUATION.

4 TRANSITION DUCT AS REQUIRED TO CONNECT TO NEW 20"X22" OPENING IN PIPE BASEMENT FOUNDATION WALL. SEAL AIR TIGHT AROUND OPENING.

5 CUT 18"X24" OPENING IN BOTTOM OF DUCT AS SHOWN.

6 DUCT OPEN TO PIPE BASEMENT. PROVIDE 1/2 X 1/2 HARDWARE CLOTH OVER DUCT OPENING.

7 REMOVE CAPS AND TIE INTO EXISTING 0.75" HEATING HOT WATER SUPPLY & RETURN PIPES.

8 PROVIDE NEW PIPE MOUNTED DDC TEMPERATURE SENSOR IN EXISTING PIPE. COORDINATE SIGNAL REQUIREMENTS WITH BTUH METER.

9 THIS PIPING NOT YET INSTALLED AT TIME OF B211 WEST WING PROJECT DESIGN. DESIGN LOCATION SHOWN, ACTUAL LOCATION MAY VARY.

10 FOR INSTALLATION OF NEW STEAM METER, PROVIDE ECCENTRIC TRANSITIONS AND STRAIGHT LENGTH OF REDUCED PIPE SIZE UPSTREAM & DOWNSTREAM OF METER AS REQUIRED BY METER MANUFACTURER, REFER TO DETAIL ON SHEET H6.

11 COORDINATE AND SCHEDULE WELL IN ADVANCE WITH COTR ALL DOWNTIME ASSOCIATED WITH SWITCHOVER FROM EXISTING TO NEW STEAM AND CONDENSATE PIPING SYSTEMS.

12 INSTALL 1/2 X 1/2 HARDWARE CLOTH OVER OPENING IN FOUNDATION WALL.

13 NEW AREA WELL FOR PIPE BASEMENT VENTILATION INTAKE AIR BY G.C. REFER TO ARCHITECTURAL DRAWINGS.

14 PIPE ANCHORS. INSTALL PER MANUFACTURER'S REQUIREMENTS.

15 PIPE MOMENT GUIDES. INSTALL PER MANUFACTURER'S REQUIREMENTS.

16 HARD PIPE LOOP FOR THERMAL EXPANSION. INSTALL PER DIMENSIONS SHOWN.

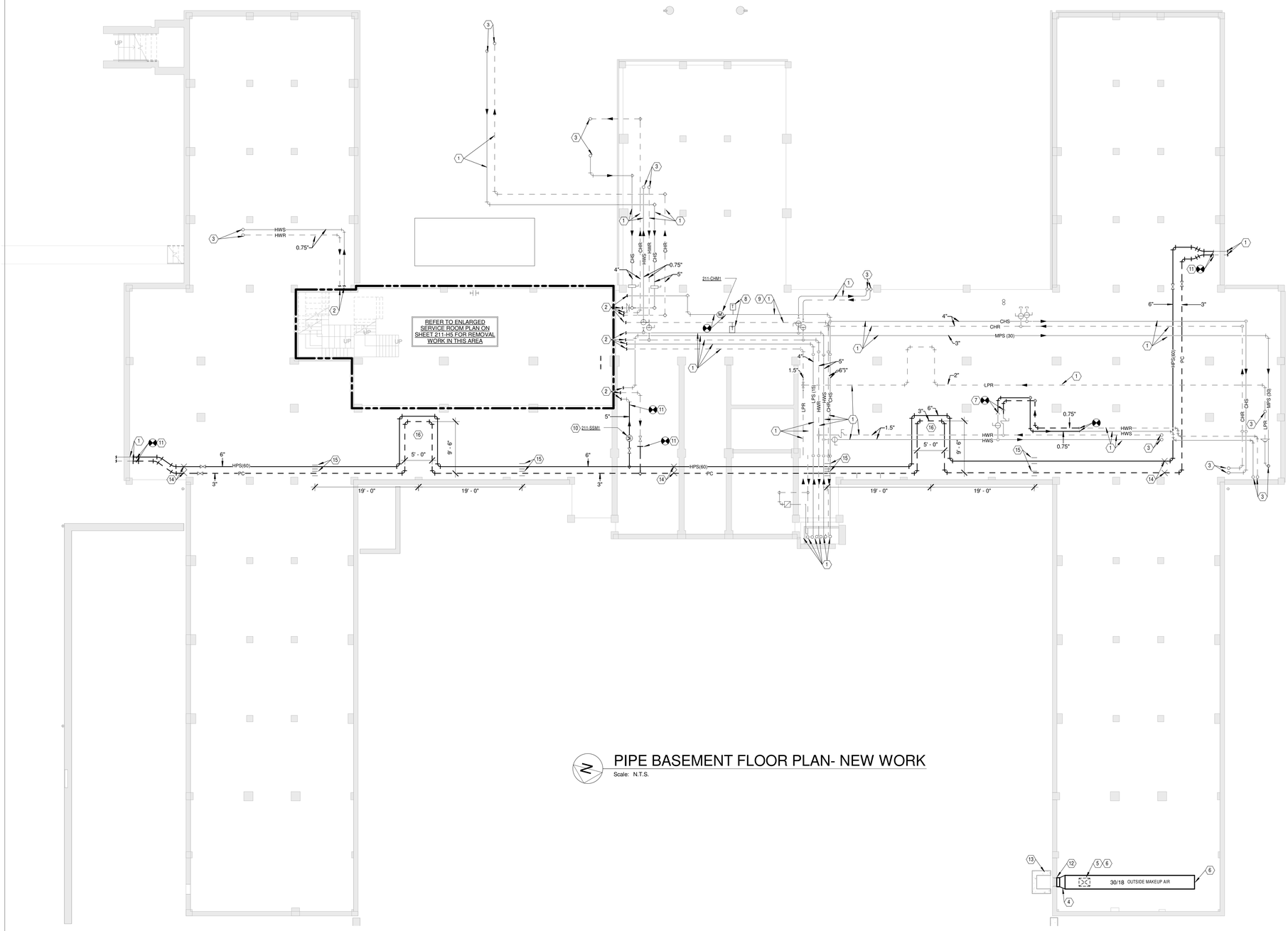

PIPE BASEMENT FLOOR PLAN- NEW WORK

Scale: N.T.S.

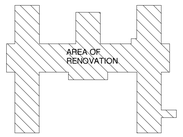

PIPE BASEMENT KEYPLAN

Scale: N.T.S.

Revisions	Date

CONSULTANTS:

Heapy Engineering
Mechanical Electrical Commissioning Technology
Nationally Recognized Leader in Sustainability / LEED
1400 W Dorothy Lane, Dayton OH 45409-1310
Ph: 937-224-0861 Fax: 937-224-5777 www.heapy.com
PROJECT NO. 2010-04024 FIRM LICENSE NO. 01528

STATE OF OHIO — JOHN A. BLACK 49341 — REGISTERED PROFESSIONAL ENGINEER

ARCHITECT/ENGINEERS:

JOHN POE ARCHITECTS
116 EAST THIRD STREET
DAYTON, OHIO
45402-2130
937 461 3290 PHONE
937 461 0260 FAX
jpa@johnpoe.com

Drawing Title: PIPE BASEMENT FLOOR PLAN - NEW WORK

Approved: Project Director

Project Title: RENOVATE CLC BUILDING 211 WEST

Location: Chillicothe, Ohio

Date: 09/06/2013 | Checked: JAC | Drawn: TEG

Project No. VA Project No. 538-107 JPA Project No. 11001.00

Building Number: 211

Drawing Number: 211-H6

Dwg. 93 of 132

Office of Construction and Facilities Management

Department of Veterans Affairs

9/6/2013 1:28:09 PM

FULLY SPRINKLERED

GENERAL NOTES

A REFER TO SHEET H1 FOR LEGEND, ABBREVIATIONS AND ADDITIONAL GENERAL NOTES.

B REFER TO PARTIAL BASEMENT PIPING FLOOR PLAN ON SHEET 211-H8 FOR PIPING CONNECTIONS TO MECHANICAL EQUIPMENT SHOWN ON THIS SHEET.

C APPROXIMATE ELEVATIONS NOTED ARE TO THE CENTER OF THE DUCT.

D CAREFULLY COORDINATE WORK IN COFFEE BISTRO, LIBRARY SUPPORT AREAS, AND OTHER OCCUPIED BASEMENT SPACES WITH COTR WELL IN ADVANCE OF PERFORMING WORK IN THESE AREAS. THIS WORK WILL NEED TO BE ACCOMPLISHED WHEN THESE AREAS ARE NOT IN OPERATION WHICH IS EITHER WEEKENDS OR WEEK NIGHTS.

NOTES

1 211-AHU7 SUPPLY DUCT. 22/12 UP.

2 211-AHU7 RETURN DUCT. 18/10 UP.

3 211-AHU8 SUPPLY DUCT. 18/38 UP.

4 211-AHU8 RETURN DUCT. 10/62 UP.

5 RELOCATE AIR DEVICE-COORDINATE LOCATION WITH EXISTING CEILING GRID, LIGHTS, ETC.

6 211-AHU8 RETURN DUCT. 22/10 UP. TRANSITION FROM 28/8 TO 22/10 IN VERTICAL, JUST BELOW FIRST FLOOR SLAB.

7 211-EF10 EXHAUST DUCT. 10"X10" UP.

8 ROUTE DUCT BETWEEN STRUCTURAL BEAMS.

9 RUN DUCT AS HIGH AS POSSIBLE. COORDINATE WITH WORK FOR OTHER TRADES.

10 EXISTING DUCTWORK TO REMAIN.

11 REFER TO PARTIAL FIRST FLOOR DUCTWORK PLAN ON SHEET 211-H9 FOR CONTINUATION.

12 211-EF11 EXHAUST DUCT. 6/10 UP. ACCESS TO FIRE DAMPER IN FIRST FLOOR SLAB IS FROM BASEMENT LEVEL. PER FIRE DAMPER DETAIL ON SHEET H5, PROVIDE DUCT ACCESS PANEL IN DUCT ABOVE BASEMENT CEILING FOR ACCESS TO THIS FIRE DAMPER.

13 NEW AREA WELL BY G.C., FOR PIPE BASEMENT AIR INTAKE. REFER TO SHEET 211-H6 AND ARCHITECTURAL DRAWING.

14 EXISTING (ABANDONED) PIPING TO REMAIN.

15 EXISTING SPLIT SYSTEM AIR CONDITIONING UNIT TO REMAIN.

16 EXISTING AIR DEVICE TO REMAIN.

17 EXISTING VAV BOX TO REMAIN.

18 REBALANCE BOX AIRFLOWS THROUGH DDC SYSTEM TO MINIMUM AND MAXIMUM AIRFLOWS AS INDICATED IN AIR TERMINAL UNIT SCHEDULE ON SHEET H3.

19 EXISTING HOT WATER CABINET CONVECTOR TO REMAIN.

20 EXISTING CEILING MOUNTED ELECTRIC UNIT HEATER TO REMAIN.

21 NEW 12"X12" LOUVER BY G.C. REFER TO ARCHITECTURAL DRAWINGS AND SPECIFICATIONS. CONNECT NEW DUCT TO LOUVER AS SHOWN, TO ENSURE AIRTIGHT AND WATERTIGHT SEAL.

22 EXISTING EQUIPMENT IN THIS ROOM SERVING LIBRARY IS EXISTING TO REMAIN.

23 EXISTING DUCT MOUNTED 10"X6" SIDEWALL SUPPLY REGISTER, BALANCE TO CFM INDICATED.

24 RELOCATED AIR TRANSFER DUCT IN WALL ABOVE CEILING

25 EXTENT OF DEDUCT ALTERNATE #1. REFER TO PLAN ON SHEET 211-H8.

26 PROVIDE BALANCE DAMPER IN VERTICAL PORTION OF DUCT. ALTERNATIVELY, PROVIDE REGISTER IN LIEU OF GRILLE, FOR BALANCING PURPOSES.

27 PROVIDE DUCT ACCESS PANEL IN BOTTOM OR SIDE OF DUCT AT THIS LOCATION AS REQUIRED BY 23 31 00, FOR ACCESS TO SMOKE DETECTOR PROVIDED BY THE E.C. REFER TO DETAIL ON SHEET H5. COORDINATE LOCATION WITH E.C.

28 PROVIDE FLEXIBLE CONNECTIONS BETWEEN EQUIPMENT AND SHEETMETAL DUCTWORK. REFER TO SPECIFICATIONS AND DETAIL ON SHEET H4.

29 RE-ROUTE EXISTING PIPING TO REMAIN, SERVING LIBRARY, LOCATED ABOVE CORRIDOR 010 AS REQUIRED FOR INSTALLATION OF NEW DUCTWORK. COORDINATE ALL SHUTDOWNS WITH COTR WELL IN ADVANCE. REPAIR INSULATION TO MATCH EXISTING WHEN COMPLETE.

30 EXISTING "TREND IQ3 XCITE" BACNET PROGRAMMABLE EQUIPMENT CONTROLLER. FULLY INTEGRATE THIS CONTROLLER AND ALL ASSOCIATED POINTS, CONTROL LOGIC AND SEQUENCES, ETC. INTO EXISTING NIAGARA AX JACE 600 SERIES BUILDING CONTROLLER IN SERVICE ROOM AND PROVIDE NEW EQUIPMENT GRAPHICS, PER SPECS. ALL EXISTING POINTS ARE AVAILABLE VIA BACNET IP. REFER TO SHEET 211-H5 FOR LOCATION OF EXISTING BUILDING CONTROLLER. REFER TO SHEET H12 AND 23 09 23 FOR EXISTING POINTS AND SEQUENCES TO BE INTEGRATED.

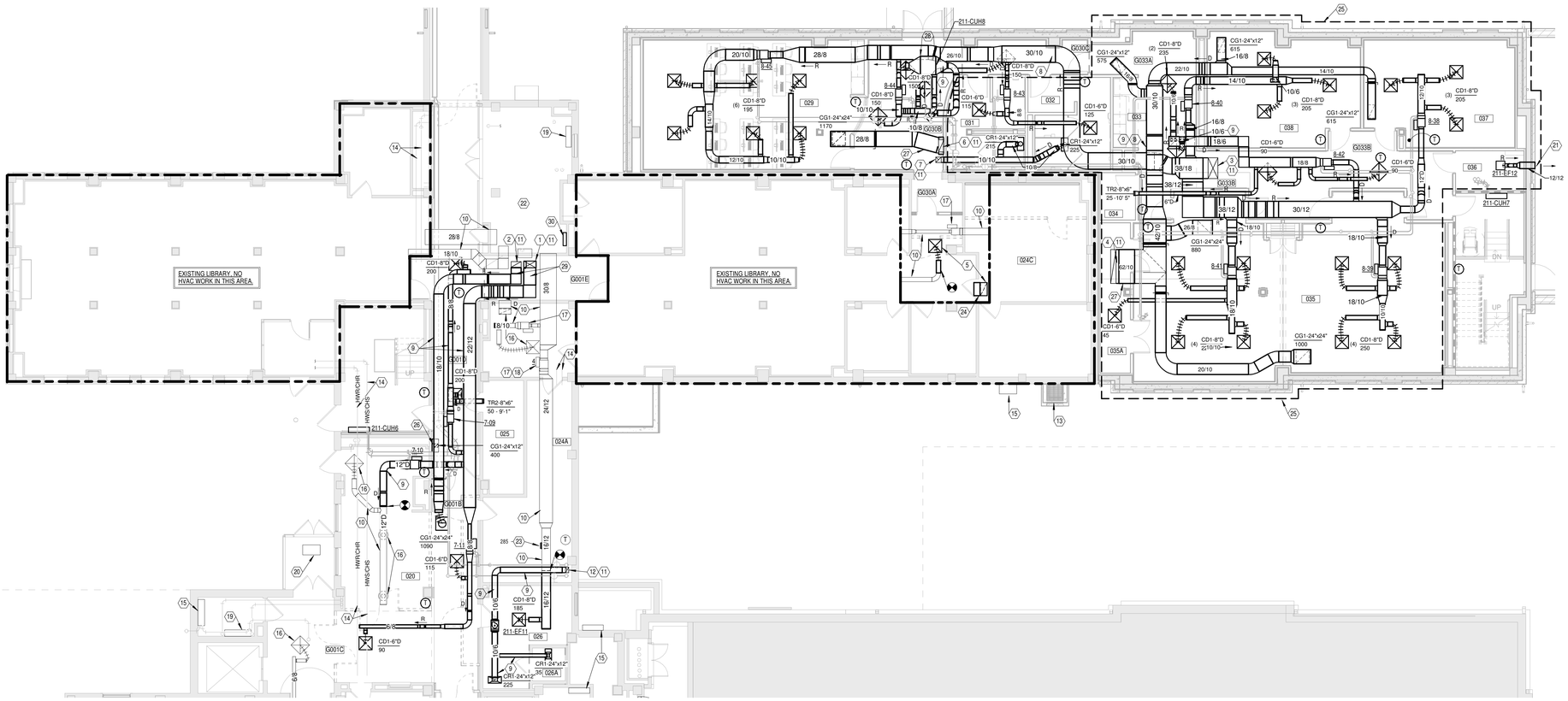

PARTIAL BASEMENT FLOOR PLAN DUCTWORK

Scale: 1/8" = 1'-0"

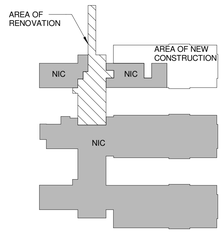

BASEMENT NEW WORK KEYPLAN

Scale: N.T.S.

BASEMENT FLOOR ROOM SCHEDULE	
Name	Number
EXIST. BISTRO	020
EXIST. LIBRARY WORK ROOM	024A
EXIST. MTG. RM.	024C
EXIST. STOR.	025
EXIST. STAFF LOCKERS	026
EXIST. MOP CL.	026A
CLASSROOM	029
MEN	031
WOMEN	032
KITCH.	033
ELEC. CLOS.	034
LARGE MEETING	035
STOR.	035A
H.A.C.	036
SMALL MEETING	037
SMALL MEETING	038
EXIST. CORR.	G001B
EXIST. CORR.	G001C
EXIST. CORR.	G001D
EXIST. CORR.	G001E
CORR.	G030A
CORR.	G030B
CORR.	G030C
CORR.	G033A
CORR.	G033B

Revisions	Date

CONSULTANTS:

Heapy Engineering
Mechanical Electrical Commissioning Technology
Nationally Recognized Leader in Sustainability / LEED
1400 W Dorothy Lane, Dayton OH 45409-1310
Ph: 937-224-0861 Fax: 937-224-5777 www.heapy.com
PROJECT NO. 2010-04024 FIRM LICENSE NO. 01528

STATE OF OHIO — JOHN A. BLACK 49341 — REGISTERED PROFESSIONAL ENGINEER

ARCHITECT/ENGINEERS:

JOHN POE ARCHITECTS
116 EAST THIRD STREET
DAYTON, OHIO
45402-2130
937 461 3290 PHONE
937 461 0260 FAX
jpa@johnpoe.com

Drawing Title: PARTIAL BASEMENT FLOOR PLAN - DUCTWORK

Approved: Project Director

Project Title: RENOVATE CLC BUILDING 211 WEST

Location: Chillicothe, Ohio

Date: 09/06/2013 | Checked: JAC | Drawn: TEG

Project No.: VA Project No. 538-107; JPA Project No. 11001.00

Building Number: 211

Drawing Number: 211-H7

Dwg. 94 of 132

Office of Construction and Facilities Management

Department of Veterans Affairs

9/6/2013 1:28:23 PM

FULLY SPRINKLERED

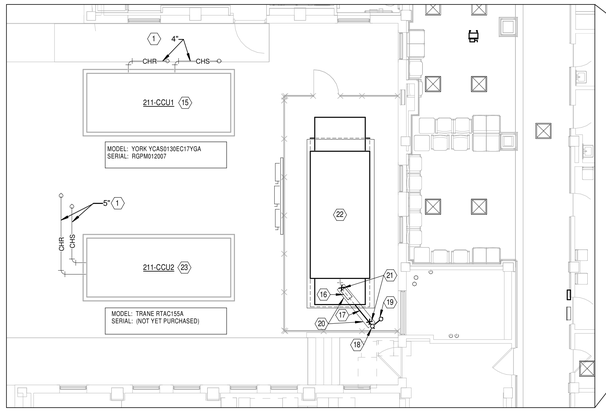

CHILLER YARD PLAN - PIPING

Scale: 1/8" = 1'-0"

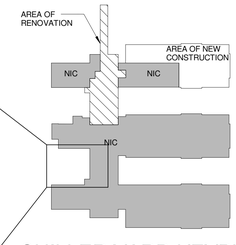

CHILLER YARD KEYPLAN

Scale: N.T.S.

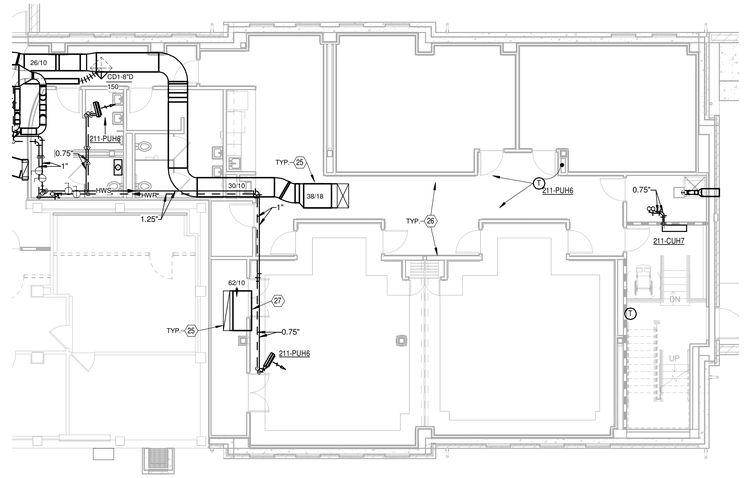

PARTIAL BASEMENT FLOOR PLAN - DEDUCT ALTERNATE

Scale: 1/8" = 1'-0"

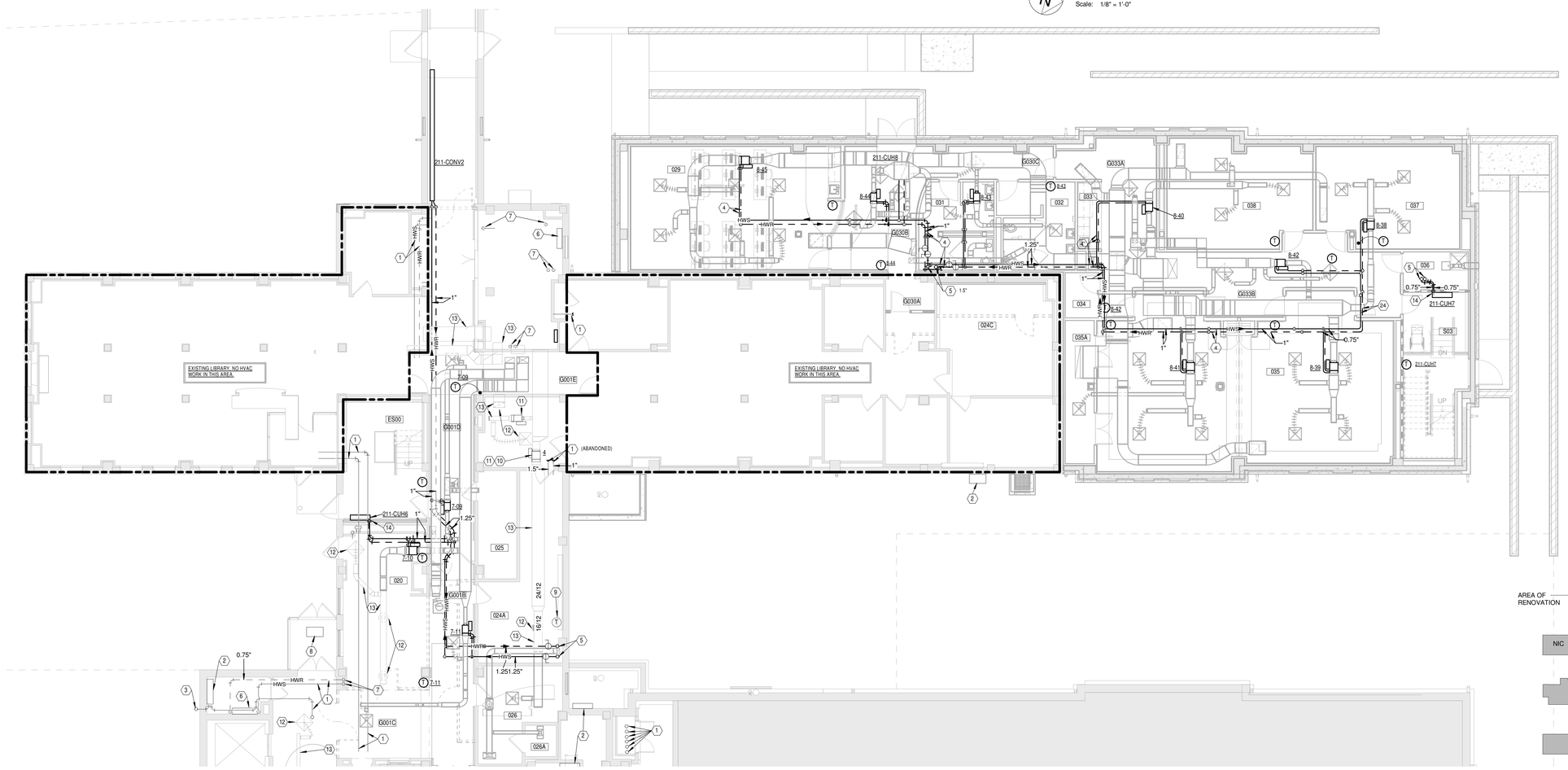

PARTIAL BASEMENT FLOOR PLAN - PIPING

Scale: 1/8" = 1'-0"

GENERAL NOTES

A REFER TO SHEET H1 FOR LEGEND, ABBREVIATIONS AND ADDITIONAL GENERAL NOTES.

NOTES

1. EXISTING PIPING TO REMAIN.
2. EXISTING SPLIT SYSTEM AIR CONDITIONING UNIT TO REMAIN.
3. EXISTING SPLIT SYSTEM EVAPORATOR DRAIN PIPING TO REMAIN.
4. ROUTE PIPING TIGHT TO UNDERSIDE OF BEAMS.
5. REFER TO FIRST FLOOR PIPING PLAN ON SHEET 211-H10 FOR CONTINUATION.
6. EXISTING HOT WATER CABINET CONVECTOR TO REMAIN.
7. REFER TO PIPE BASEMENT PLAN ON SHEET 211-H6 FOR CONTINUATION.
8. EXISTING CEILING MOUNTED ELECTRIC UNIT HEATER TO REMAIN.
9. EXISTING WALL MOUNTED THERMOSTAT TO REMAIN.
10. REPLACE FLOW CONTROLLER CARTRIDGE TO REBALANCE REHEAT COIL WATER FLOW TO 0.7 GPM, PER AIR TERMINAL UNIT SCHEDULE ON SHEET H3.
11. EXISTING VAV REHEAT TERMINAL UNIT TO REMAIN.
12. EXISTING AIR DEVICE TO REMAIN.
13. EXISTING DUCT TO REMAIN.
14. DROP PIPES IN NEW WALL CAVITY TO CONNECT TO CABINET UNIT HEATER. COORDINATE WITH G.C.
15. EXISTING AIR COOLED CHILLER ON GRADE TO REMAIN (MODEL AND SERIAL NUMBERS AS INDICATED). PROVIDE NEW LON WORKS GATEWAY AND INTEGRATE INTO NEW DDC BUILDING CONTROLLER IN BASEMENT MECHANICAL ROOM. REFER TO SHEET 211-H5 FOR LOCATION OF NEW GATEWAY AND EXISTING BUILDING CONTROLLER.
16. PROVDE FLANGED FLEXIBLE BELLOWS PIPE CONNECTOR BY HYSPAN OR EQUAL.
17. WELDED SCHEDULE 40 STEEL EXHAUST PIPE (APPROXIMATE 8"DIA) BY H.C. COORDINATE EXACT SIZE, INSTALLATION REQUIREMENTS, ETC WITH E.C. PER GENERATOR MAUFACTURERS CRITERIA.
18. EXTEND EXHAUST PIPE UP SIDE OF BUILDING, WITH PIPE GUIDES AT MAXIMUM 10 FT. INTERVALS. REFER TO STACK GUIDE DETALS ON SHEET H7. TERMINATE STACK 3 FT. ABOVE ADJACENT FLAT ROOF.
19. PROVIDE NEW 1" DRAIN LINE WITH MANUAL SHUTOFF VALVE. TERMINATE 2 FEET ABOVE FINISHED GRADE.
20. PROVIDE VERTICAL PIPE SUPPORT STANCHION AT MIDPOINT OF HORIZONTAL EXHAUST PIPE RUN. FASTEN TOP TO HORIZONTAL C-CHANNEL SUPPORT, AND PROVIDE ROLLER SUPPORT AT MIDPOINT OF PIPE, ABOVE STANCHION. SECURELY FASTEN C-CHANNEL TO EXISTING BUILDING STRUCTURE. REFER TO DETAIL ON SHEET H7.
21. ANCHOR PIPE TO C-CHANNEL AT THIS POINT.
22. NEW EMERGENCY GENERATOR BY E.C.
23. EXISTING AIR-COOLED CHILLER ON GRADE WITH INTEGRAL LON COMMUNICATIONS CARD TO REMAIN. CHILLER IS NOT INSTALLED AT TIME OF WEST WING ADDITION DESIGN. BASIS OF DESIGN MODEL AND SERIAL NUMBERS ARE INDICATED. INTEGRATE AVAILABLE CHILLER INPUT AND OUTPUT VARIABLES INTO EXISTING BUILDING CONTROLLER IN BASEMSENT MECHANICAL ROOM. REFER TO SHEEET 211-H5 FOR LOCATION OF EXISTING BUILDING CONTROLLER, AND TO SPECIFICATION SECTION 23 09 23 FOR REQUIRED INPUT AND OUTPUT VARIABLES TO BE INTEGRATED.
24. ROUTE PIPE BETWEEN STRUCTURAL BEAMS.
25. REFER TO SHEET 211-H7 FOR NOTES ASSOCIATED WITH DUCTWORK SHOWN IN DEDUCT ALTERNATE PLAN.
26. NEW PORTION OF BUILDING SHOWN IN DEDUCT ALTERNATE PLAN IS SHELL SPACE IF DEDUCT IS TAKEN. (WALLS SHOWN WILL NOT BE BUILT.)
27. CAP DUCT AND SEAL AIRTIGHT, FOR FUTURE CONNECTION.

BASEMENT FLOOR ROOM SCHEDULE

Name	Number
EXIST. BISTRO	020
EXIST. LIBRARY WORK ROOM	024A
EXIST. MTG. RM.	024C
EXIST. STOR.	025
EXIST. STAFF LOCKERS	026
EXIST. MOP CL.	026A
CLASSROOM	029
MEN	031
WOMEN	032
KITCH.	033
ELEC. CLOS.	034
LARGE MEETING	035
STOR.	035A
H.A.C.	036
SMALL MEETING	037
SMALL MEETING	038
EXIST. CORR.	G001B
EXIST. CORR.	G001C
EXIST. CORR.	G001D
EXIST. CORR.	G001E
CORR.	G030A
CORR.	G030B
CORR.	G030C
CORR.	G033A
CORR.	G033B

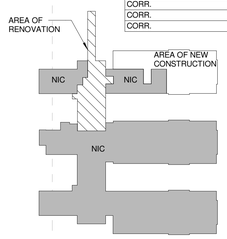

BASEMENT NEW WORK KEYPLAN

Scale: N.T.S.

Revisions	Date

CONSULTANTS:

Heapy Engineering
Mechanical Electrical Commissioning Technology
Nationally Recognized Leader in Sustainability / LEED
1400 W Dorothy Lane, Dayton OH 45409-1310
Ph: 937-224-0861 Fax: 937-224-5777 www.heapy.com
PROJECT NO. 2010-04024 FIRM LICENSE NO. 01528

STATE OF OHIO — JOHN A. BLACK 49341 — REGISTERED PROFESSIONAL ENGINEER

ARCHITECT/ENGINEERS:

JOHN POE ARCHITECTS
116 EAST THIRD STREET
DAYTON, OHIO
45402-2130
937 461 3290 PHONE
937 461 0260 FAX
joa@ohmpoe.com

Drawing Title: PARTIAL BASEMENT FLOOR PLAN - PIPING

Approved: Project Director

Project Title: RENOVATE CLC BUILDING 211 WEST

Location: Chillicothe, Ohio

Date: 09/06/2013 | Checked: JAC | Drawn: TEG

Project No. VA Project No. 538-107 JPA Project No. 11001.00

Building Number: 211

Drawing Number: 211-H8

Dwg. 95 of 132

Office of Construction and Facilities Management
Department of Veterans Affairs

9/6/2013 1:28:45 PM

FULLY SPRINKLERED

GENERAL NOTES

A REFER TO SHEET H1 FOR LEGEND, ABBREVIATIONS AND ADDITIONAL GENERAL NOTES.

B REFER TO PARTIAL FIRST FLOOR PIPING FLOOR PLAN ON SHEET 211-H10 FOR PIPING CONNECTIONS TO MECHANICAL EQUIPMENT SHOWN ON THIS SHEET.

C APPROXIMATE ELEVATIONS NOTED ARE TO THE CENTER OF THE DUCT.

D COORDINATE ALL DUCTWORK ABOVE CEILING WITH PATIENT LIFT TRACK STRUCTURE, DURING PREPARATION OF LAYOUT DRAWINGS REQUIRED BY 23 05 11 (1.4-H).

NOTES

1 PROVIDE RESIDENTIAL RANGE HOOD FIRE SUPPRESSION SYSTEM EQUAL TO GUARDIAN III. SYSTEM SHALL INCLUDE MANUAL REMOTE PULL STATION FOR MOUNTING ON WALL IN KITCHEN, AC/DC WALL PLUG-IN POWER SUPPLY, AND ALARM INTERFACE ENCLOSURE FOR REMOTE MONITORING BY FIRE ALARM SYSTEM. COORDINATE INSTALLATION WITH E.C., AND WITH HOOD AND CABINETRY PROVIDED BY G.C.

2 RUN DUCT AS HIGH AS POSSIBLE. COORDINATE WITH WORK FROM OTHER TRADES.

3 ROUTE DUCT BETWEEN STRUCTURAL BEAMS.

4 TYPE B STATIC FIRE DAMPER IN DUCT THRU SHAFT WALL. COORDINATE SHAFT WALL OPENING SIZE WITH RECESSED BLADE FIRE DAMPER CLEARANCE REQUIREMENTS. PROVIDE DUCT ACCESS PANEL AT THIS LOCATION AS REQUIRED BY 23 31 00. REFER TO DETAILS ON SHEET H5.

5 DUCT THRU FIRST FLOOR SLAB WITH TYPE B STATIC FIRE DAMPER. ACCESS FROM FIRST FLOOR. COORDINATE DUCT ACCESS PANEL WITH FIRE RATED WALL ACCESS DOOR BY G.C. PRIOR TO POURING OF NEW FLOOR SLAB, OR CUTTING OF EXISTING SLAB COORDINATE FLOOR SLAB OPENING SLEEVE SIZES WITH G.C., TAKING INTO ACCOUNT RECESSED BLADE FIRE DAMPER CLEARANCE REQUIREMENTS. COORDINATE PENETRATIONS WITH NEW STRUCTURAL STEEL FRAMING AROUND DUCTS - REFER TO STRUCTURAL PLANS.

6 DUCT STATIC PRESSURE SENSOR FOR CONTROL OF 211-AHU6 SUPPLY FAN VARIABLE SPEED MOTOR CONTROLLER. REFER TO CONTROL DIAGRAMS & SEQUENCES ON SHEET H9.

7 DUCT STATIC PRESSURE SENSOR FOR CONTROL OF 211-AHU7 SUPPLY FAN VARIABLE SPEED MOTOR CONTROLLER. REFER TO CONTROL DIAGRAMS & SEQUENCES ON SHEET H9.

8 DUCT STATIC PRESSURE SENSOR FOR CONTROL OF 211-AHU8 SUPPLY FAN VARIABLE SPEED MOTOR CONTROLLER. REFER TO CONTROL DIAGRAMS & SEQUENCES ON SHEET H9.

9 211-AHU6 SUPPLY DUCT. 20/20 UP.

10 211-AHU6 RETURN DUCT. 18/18 UP.

11 211-EF9 EXHAUST DUCT. 14/14 UP.

12 211-AHU7 SUPPLY DUCT. 22/24 UP AND 22/12 DOWN .

13 211-AHU7 RETURN DUCT. 22/24 UP AND 18/10 DOWN.

14 211-AHU8 SUPPLY DUCT. 30/48 UP AND 18/38 DOWN.

15 211-AHU8 RETURN DUCT. 20/34 UP AND 10/62 DOWN.

16 211-AHU8 RETURN DUCT. 24/20 UP AND 10/22 DOWN.

17 211-EF10 EXHAUST DUCT. 14/12 UP.

18 211-EF10 EXHAUST DUCT. 14/20 UP AND 10/10 DOWN.

19 PROVIDE DUCT ACCESS PANEL IN BOTTOM OR SIDE OF DUCT AT THIS LOCATION AS REQUIRED BY 23 31 00, FOR ACCESS TO SMOKE DETECTOR PROVIDED BY E.C. REFER TO DETAIL ON SHEET H5. COORDINATE LOCATION WITH E.C.

20 10"X6" EXHAUST DUCT UP FROM BASEMENT, REFER TO SHEET 211-H7 FOR CONTINUATION.

21 TRANSITION NEW EXHAUST DUCT TO CONNECT TO NEW 12"X12" LOUVER PROVIDED BY G.C. REFER TO ARCHITECTURAL DRAWINGS AND SPECIFICATIONS.

22 DUCT THRU SECOND FLOOR SLAB WITH TYPE B STATIC FIRE DAMPER. ACCESS FROM FIRST FLOOR. PROVIDE DUCT ACCESS PANEL AT THIS LOCATION AS REQUIRED BY 23 31 00-REFER TO DETAILS ON SHEET H5. PRIOR TO CUTTING OF EXISTING SLAB, COORDINATE FLOOR SLAB OPENING SIZES WITH G.C., TAKING INTO ACCOUNT RECESSED BLADE FIRE DAMPER CLEARANCE REQUIREMENTS. COORDINATE PENETRATIONS WITH NEW STRUCTURAL STEEL FRAMING AROUND DUCTS - REFER TO STRUCTURAL PLANS.

23 DUCT THRU FIRST FLOOR SLAB WITH TYPE B STATIC FIRE DAMPER. ACCESS FROM BASEMENT LEVEL. PRIOR TO CUTTING OF EXISTING SLAB, COORDINATE FLOOR SLAB OPENING SIZE WITH G.C., TAKING INTO ACCOUNT RECESSED BLADE FIRE DAMPER CLEARANCE REQUIREMENTS. REFER TO BASEMENT DUCTWORK PLAN ON SHEET 211-H7 FOR CONTINUATION AND FIRE DAMPER ACCESS PROVISIONS.

24 CONNECT TO RANGE HOOD DUCT COLLAR WITH HOOD MANUFACTURER'S OPTIONAL RECTANGULAR TO 8" ROUND TRANSITION FITTING, FOR DUCTED VENTING OPTION.

25 TERMINATE 8" ROUND SHEETMETAL DUCT WITH RANGE HOOD MANUFACTURER'S OPTIONAL WALL CAP. SLEEVE DUCT THROUGH EXTERIOR WALL AND SEAL WEATHERTIGHT.

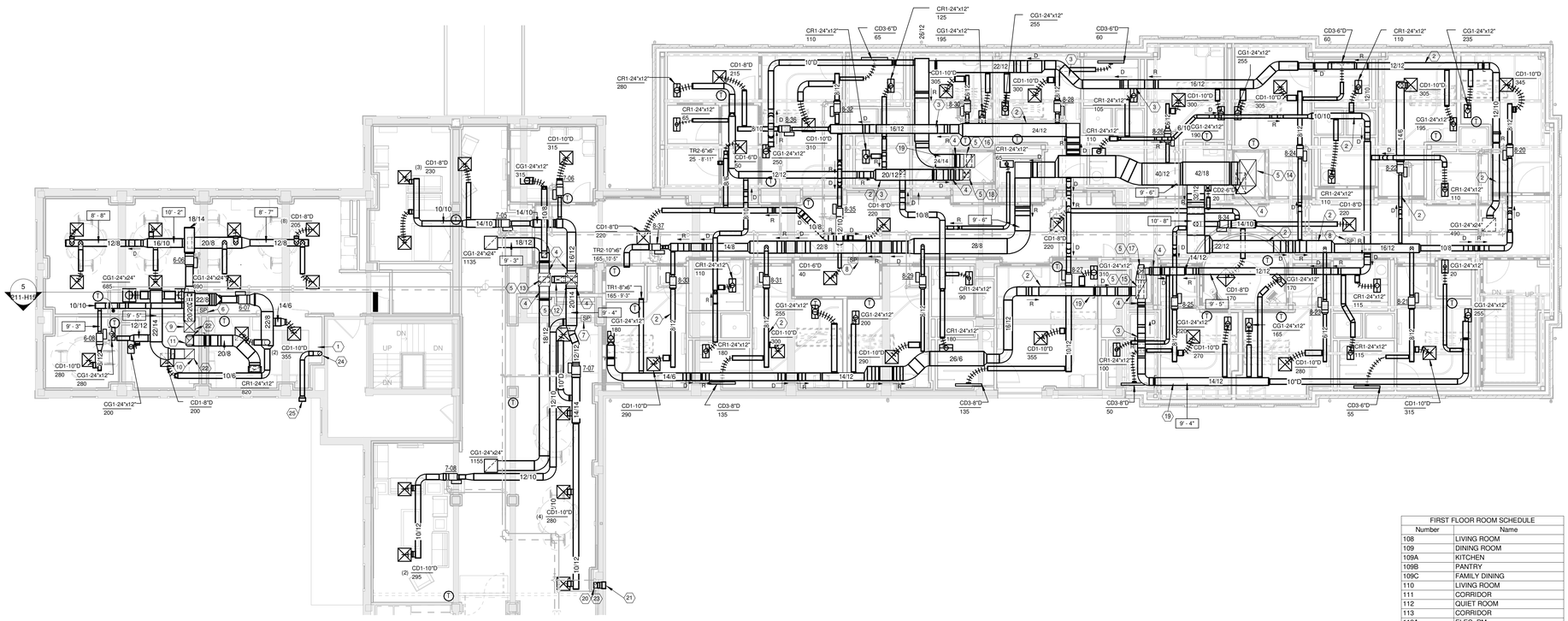

PARTIAL FIRST FLOOR PLAN DUCTWORK

Scale: 1/8" = 1'-0"

FIRST FLOOR ROOM SCHEDULE	
Number	Name
108	LIVING ROOM
109	DINING ROOM
109A	KITCHEN
109B	PANTRY
109C	FAMILY DINING
110	LIVING ROOM
111	CORRIDOR
112	QUIET ROOM
113	CORRIDOR
113A	ELEC. RM.
113B	HAC
113C	SOILED CARTS
113D	CORRIDOR
114	BEDROOM
114A	BATH
115	BEDROOM
115A	BATH
116	STAFF TOILET
117	BEDROOM
117A	BATH
118	BEDROOM
118A	BATH
119	MED. RM.
120	BEDROOM
120A	BATH
121	BEDROOM
121A	BATH
122	BEDROOM
122A	BATH
123	STOR.
124	BEDROOM
124A	BATH
125	BEDROOM
125A	BATH
126	NURSE'S SUB STATION
127	BEDROOM
127A	BATH
128	SPECIAL CARE
128A	BATH
129	BEDROOM
129A	BATH
130	CLEAN LINEN
131	BEDROOM
131A	BATH
132	BEDROOM
132A	BATH
133	COMM.
134	DINING ROOM

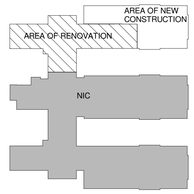

FIRST FLOOR NEW WORK KEYPLAN

Scale: N.T.S.

Revisions	Date

CONSULTANTS:

Heapy Engineering
Mechanical Electrical Commissioning Technology
Nationally Recognized Leader in Sustainability / LEED
1400 W Dorothy Lane, Dayton OH 45409-1310
Ph: 937-224-0861 Fax: 937-224-5777 www.heapy.com
PROJECT NO. 2010-04024 FIRM LICENSE NO. 01528

STATE OF OHIO — JOHN A. BLACK 49341 — REGISTERED PROFESSIONAL ENGINEER

ARCHITECT/ENGINEERS:

JOHN POE ARCHITECTS
116 EAST THIRD STREET
DAYTON, OHIO
45402-2130
937 461 3290 PHONE
937 461 0260 FAX
jpa@johnpoe.com

Drawing Title: PARTIAL FIRST FLOOR PLAN - DUCTWORK

Approved: Project Director

Project Title: RENOVATE CLC BUILDING 211 WEST

Location: Chillicothe, Ohio

Date: 09/06/2013 | Checked: JAC | Drawn: TEG

Project No. VA Project No. 538-107 JPA Project No. 11001.00

Building Number: 211

Drawing Number: 211-H9

Dwg. 96 of 132

Office of Construction and Facilities Management

Department of Veterans Affairs

9/6/2013 1:29:01 PM

FULLY SPRINKLERED

GENERAL NOTES

A REFER TO SHEET H1 FOR LEGEND, ABBREVIATIONS AND ADDITIONAL GENERAL NOTES.

NOTES

1 EXISTING PIPING TO REMAIN.

2 ROUTE PIPING BETWEEN STRUCTURAL BEAMS.

3 PIPES DROP IN NEW CHASE TO BASEMENT. COORINATE WITH G.C.

4 REFER TO BASEMENT PIPING PLAN ON SHEET 211-H8 FOR CONTINUATION.

5 WORK IN THIS AREA IS EXISTING TO REMAIN. NO HVAC NEW WORK SCOPE IN THIS AREA.

6 REMOVE CAPS AND CONNECT TO EXISTING HEATING HOT WATER SUPPLY AND RETURN PIPES AT THIS POINT.

7 PIPES DROP IN NEW WALL CAVITY TO BASEMENT.

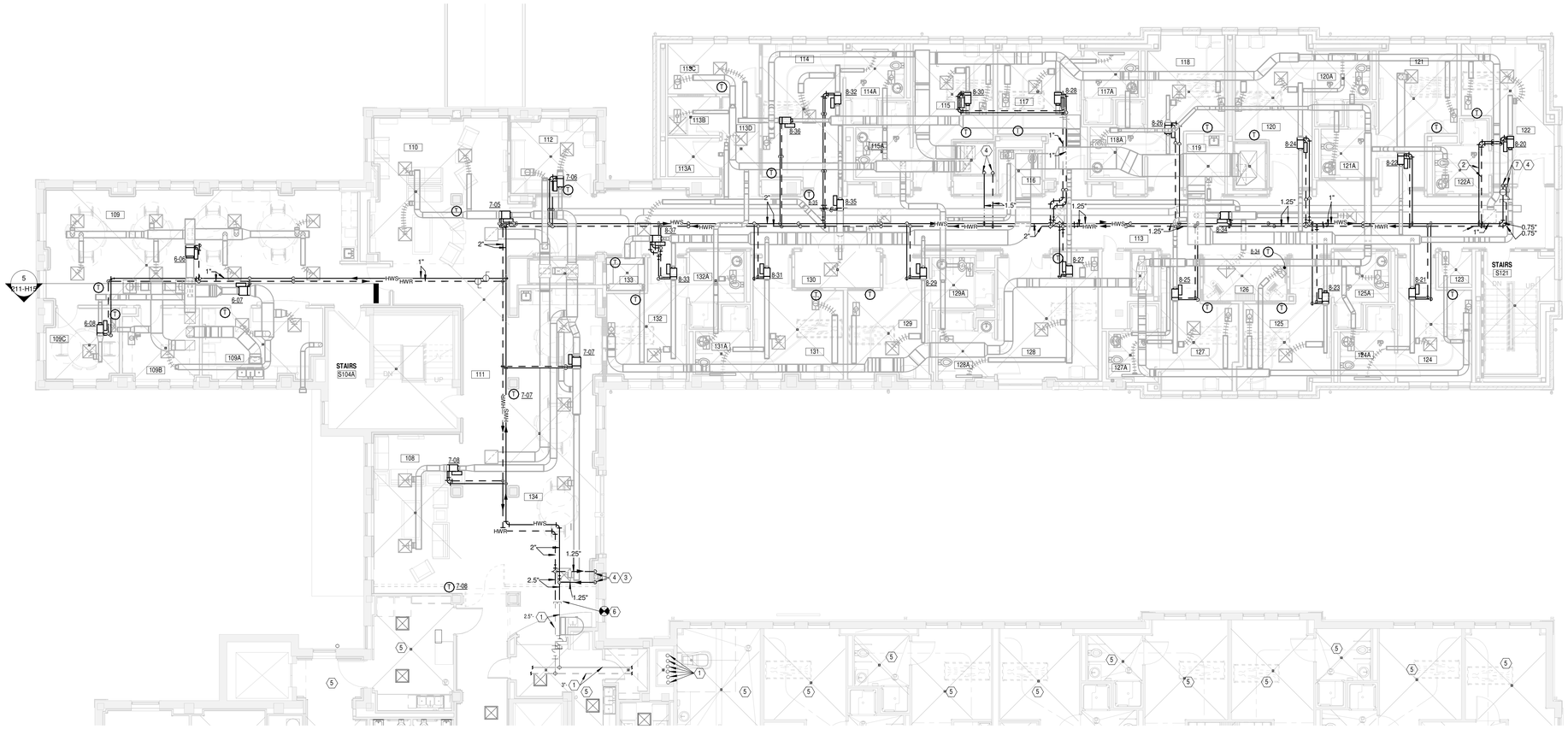

FIRST FLOOR ROOM SCHEDULE	
Number	Name
108	LIVING ROOM
109	DINING ROOM
109A	KITCHEN
109B	PANTRY
109C	FAMILY DINING
110	LIVING ROOM
111	CORRIDOR
112	QUIET ROOM
113	CORRIDOR
113A	ELEC. RM.
113B	HAC
113C	SOILED CARTS
113D	CORRIDOR
114	BEDROOM
114A	BATH
115	BEDROOM
115A	BATH
116	STAFF TOILET
117	BEDROOM
117A	BATH
118	BEDROOM
118A	BATH
119	MED. RM.
120	BEDROOM
120A	BATH
121	BEDROOM
121A	BATH
122	BEDROOM
122A	BATH
123	STOR.
124	BEDROOM
124A	BATH
125	BEDROOM
125A	BATH
126	NURSE'S SUB STATION
127	BEDROOM
127A	BATH
128	SPECIAL CARE
128A	BATH
129	BEDROOM
129A	BATH
130	CLEAN LINEN
131	BEDROOM
131A	BATH
132	BEDROOM
132A	BATH
133	COMM.
134	DIINING ROOM

PARTIAL FIRST FLOOR PLAN-PIPING

Scale: 1/8" = 1'-0"

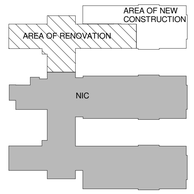

FIRST FLOOR NEW WORK KEYPLAN

Scale: N.T.S.

Revisions	Date

CONSULTANTS:

Heapy Engineering
Mechanical Electrical Commissioning Technology
Nationally Recognized Leader in Sustainability / LEED
1400 W Dorothy Lane, Dayton OH 45409-1310
Ph: 937-224-0861 Fax: 937-224-5777 www.heapy.com
PROJECT NO. 2010-04024 FIRM LICENSE NO. 01528

STATE OF OHIO — JOHN A. BLACK 49341 — REGISTERED PROFESSIONAL ENGINEER

ARCHITECT/ENGINEERS:

JOHN POE ARCHITECTS
116 EAST THIRD STREET
DAYTON, OHIO
45402-2130
937 461 3290 PHONE
937 461 0290 FAX
jpa@johnpoe.com

Drawing Title: PARTIAL FIRST FLOOR PLAN - PIPING

Approved: Project Director

Project Title: RENOVATE CLC BUILDING 211 WEST

Location: Chillicothe, Ohio

Date: 09/06/2013 | Checked: JAC | Drawn: TEG

Project No. VA Project No. 538-107 JPA Project No. 11001.00

Building Number: 211

Drawing Number: 211-H10

Dwg. 97 of 132

Office of Construction and Facilities Management

Department of Veterans Affairs

9/6/2013 1:29:20 PM

FULLY SPRINKLERED

GENERAL NOTES

A REFER TO SHEET H1 FOR LEGEND, ABBREVIATIONS AND ADDITIONAL GENERAL NOTES.

B REFER TO PARTIAL SECOND FLOOR PIPING FLOOR PLAN ON SHEET 211-H12 FOR PIPING CONNECTIONS TO MECHANICAL EQUIPMENT SHOWN ON THIS SHEET.

C APPROXIMATE ELEVATIONS NOTED ARE TO THE CENTER OF THE DUCT.

D COORDINATE ALL DUCTWORK ABOVE CEILING WITH PATIENT LIFT TRACK STRUCTURE, DURING PREPARATION OF LAYOUT DRAWINGS REQUIRED BY 23 05 11 (1.4-H). GENERAL PATH OF PATIENT LIFT TRACKS IS SHOWN ON THIS PLAN.

NOTES

1 PROVIDE RESIDENTIAL RANGE HOOD FIRE SUPPRESSION SYSTEM EQUAL TO GUARDIAN III. SYSTEM SHALL INCLUDE MANUAL REMOTE PULL STATION FOR MOUNTING ON WALL IN KITCHEN, AC/DC WALL PLUG-IN POWER SUPPLY, AND ALARM INTERFACE ENCLOSURE FOR REMOTE MONITORING BY FIRE ALARM SYSTEM. COORDINATE INSTALLATION WITH E.C., AND WITH HOOD AND CABINETRY PROVIDED BY G.C.

2 RUN DUCT AS HIGH AS POSSIBLE. COORDINATE WITH WORK FROM OTHER TRADES.

3 ROUTE DUCT BETWEEN STRUCTURAL BEAMS.

4 TYPE B STATIC FIRE DAMPER IN DUCT THRU SHAFT WALL. COORDINATE SHAFT WALL OPENING SIZE WITH RECESSED BLADE FIRE DAMPER CLEARANCE REQUIREMENTS. PROVIDE DUCT ACCESS PANEL AT THIS LOCATION AS REQUIRED BY 23 31 00. REFER TO DETAILS ON SHEET H5.

5 211-AHU6 SUPPLY DUCT. 24/16 UP.

6 211-AHU6 SUPPLY DUCT 20/20 UP AND DOWN.

7 211-AHU6 RETURN DUCT. 18/18 UP AND DOWN.

8 211-AHU6 RETURN DUCT. 8/12 UP.

9 211-AHU6 RETURN DUCT. 14/18 UP.

10 211-AHU6 RETURN DUCT. 12/12 UP.

11 211-EF9 EXHAUST DUCT. 14/12 UP.

12 211-EF9 EXHAUST DUCT. 14/14 UP AND DOWN.

13 211-AHU7 SUPPLY DUCT. 20/16 UP.

14 211-AHU7 SUPPLY DUCT. 24/22 UP AND DOWN.

15 211-AHU7 RETURN DUCT. 22/12 UP.

16 211-AHU7 RETURN DUCT. 10/8 UP.

17 211-AHU7 RETURN DUCT. 22/24 UP AND DOWN.

18 211-AHU8 SUPPLY DUCT. 34/54 UP AND 30/48 DOWN.

19 211-AHU8 RETURN DUCT. 26/34 UP AND 20/34 DOWN.

20 211-AHU8 RETURN DUCT. 26/26 UP AND 24/20 DOWN.

21 211-EF10 EXHAUST DUCT. 18/18 UP AND 14/12 DOWN.

22 211-EF10 EXHAUST DUCT. 22/20 UP AND 14/20 DOWN.

23 PROVIDE DUCT ACCESS PANEL IN BOTTOM OR SIDE OF DUCT AT THIS LOCATION AS REQUIRED BY 23 31 00. FOR ACCESS TO SMOKE DETECTOR PROVIDED BY E.C. REFER TO DETAIL ON SHEET H5. COORDINATE LOCATION WITH E.C.

24 211-AHU6 SUPPLY DUCT. 12/12 UP.

25 PROVIDE SHEETMETAL CAP ON OPEN END OF LINEN CHUTE DUCT NEAR UNDERSIDE OF ATTIC FLOOR SLAB. DUCT IS REMOVED BY OTHERS. CAP SHALL BE SAME MATERIAL AND GAUGE AS EXISTING DUCT.

26 CONNECT TO RANGE HOOD DUCT COLLAR WITH HOOD MANUFACTURER'S OPTIONAL RECTANGULAR TO 8" ROUND TRANSITION FITTING, FOR DUCTED VENTING OPTION.

27 TERMINATE 8" ROUND SHEETMETAL DUCT WITH RANGE HOOD MANUFACTURER'S OPTIONAL WALL CAP. SLEEVE DUCT THROUGH EXTERIOR WALL AND SEAL WEATHERTIGHT.

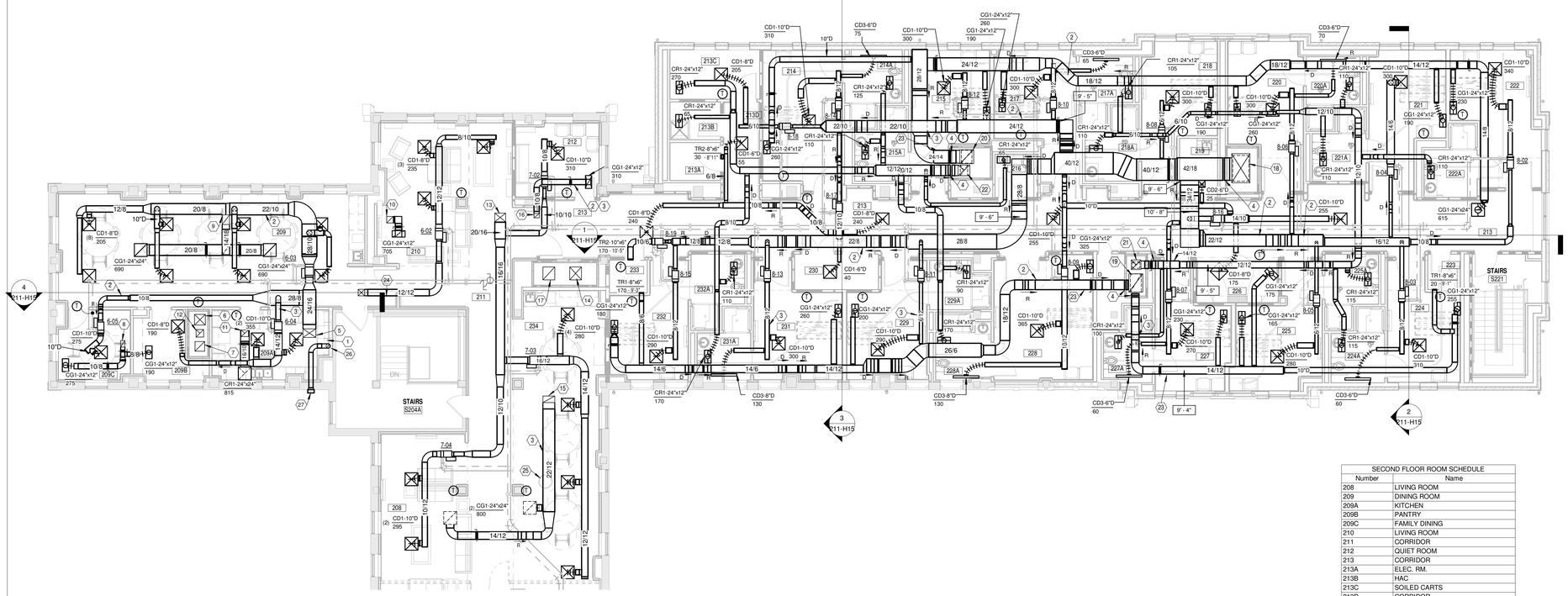

SECOND FLOOR ROOM SCHEDULE	
Number	Name
208	LIVING ROOM
209	DINING ROOM
209A	KITCHEN
209B	PANTRY
209C	FAMILY DINING
210	LIVING ROOM
211	CORRIDOR
212	QUIET ROOM
213	CORRIDOR
213A	ELEC. RM.
213B	HAC
213C	SOILED CARTS
213D	CORRIDOR
214	BEDROOM
214A	BATH
215	BEDROOM
215A	BATH
216	STAFF TOILET
217	BEDROOM
217A	BATH
218	BEDROOM
218A	BATH
219	MED. RM.
220	BEDROOM
220A	BATH
221	BEDROOM
221A	BATH
222	BEDROOM
222A	BATH
223	STOR.
224	BEDROOM
224A	BATH
225	BEDROOM
225A	BATH
226	NURSE'S SUB STATION
227	BEDROOM
227A	BATH
228	SPECIAL CARE
228A	BATH
229	BEDROOM
229A	BATH
230	CLEAN LINEN
231	BEDROOM
231A	BATH
232	BEDROOM
232A	BATH
233	COMM.
234	DINING ROOM

N

PARTIAL SECOND FLOOR PLAN - DUCTWORK

Scale: 1/8" = 1'-0"

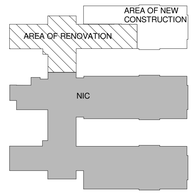

SECOND FLOOR NEW WORK KEYPLAN

Scale: N.T.S.

Revisions	Date

CONSULTANTS:

Heapy Engineering
Mechanical Electrical Commissioning Technology
Nationally Recognized Leader in Sustainability / LEED
1400 W Dorothy Lane, Dayton OH 45409-1310
Ph: 937-224-0861 Fax: 937-224-5777 www.heapy.com
PROJECT NO. 2010-04024 FIRM LICENSE NO. 01528

STATE OF OHIO — JOHN A. BLACK 49341 — REGISTERED PROFESSIONAL ENGINEER

ARCHITECT/ENGINEERS:

JOHN POE ARCHITECTS
116 EAST THIRD STREET
DAYTON, OHIO
45402-2130
937 461 3290 PHONE
937 461 0260 FAX
jpa@johnpoe.com

Drawing Title: PARTIAL SECOND FLOOR PLAN - DUCTWORK

Approved: Project Director

Project Title: RENOVATE CLC BUILDING 211 WEST

Location: Chillicothe, Ohio

Date: 09/06/2013 | Checked: JAC | Drawn: TEG

Project No. VA Project No. 538-107 JPA Project No. 11001.00

Building Number: 211

Drawing Number: 211-H11

Dwg. 98 of 132

Office of Construction and Facilities Management
Department of Veterans Affairs

9/6/2013 1:29:39 PM

FULLY SPRINKLERED

GENERAL NOTES

A REFER TO SHEET H1 FOR LEGEND, ABBREVIATIONS AND ADDITIONAL GENERAL NOTES.

NOTES

1 EXISTING PIPING TO REMAIN.

2 ROUTE PIPING BETWEEN STRUCTURAL BEAMS.

3 WORK IN THIS AREA IS EXISTING TO REMAIN. NO HVAC NEW WORK SCOPE IN THIS AREA.

4 REMOVE CAPS AND CONNECT TO EXISTING HEATING HOT WATER SUPPLY AND RETURN PIPES AT THIS POINT.

SECOND FLOOR ROOM SCHEDULE	
Number	Name
208	LIVING ROOM
209	DINING ROOM
209A	KITCHEN
209B	PANTRY
209C	FAMILY DINING
210	LIVING ROOM
211	CORRIDOR
212	QUIET ROOM
213	CORRIDOR
213A	ELEC. RM.
213B	HAC
213C	SOILED CARTS
213D	CORRIDOR
214	BEDROOM
214A	BATH
215	BEDROOM
215A	BATH
216	STAFF TOILET
217	BEDROOM
217A	BATH
218	BEDROOM
218A	BATH
219	MED. RM.
220	BEDROOM
220A	BATH
221	BEDROOM
221A	BATH
222	BEDROOM
222A	BATH
223	STOR.
224	BEDROOM
224A	BATH
225	BEDROOM
225A	BATH
226	NURSE'S SUB STATION
227	BEDROOM
227A	BATH
228	SPECIAL CARE
228A	BATH
229	BEDROOM
229A	BATH
230	CLEAN LINEN
231	BEDROOM
231A	BATH
232	BEDROOM
232A	BATH
233	COMM.
234	DINING ROOM

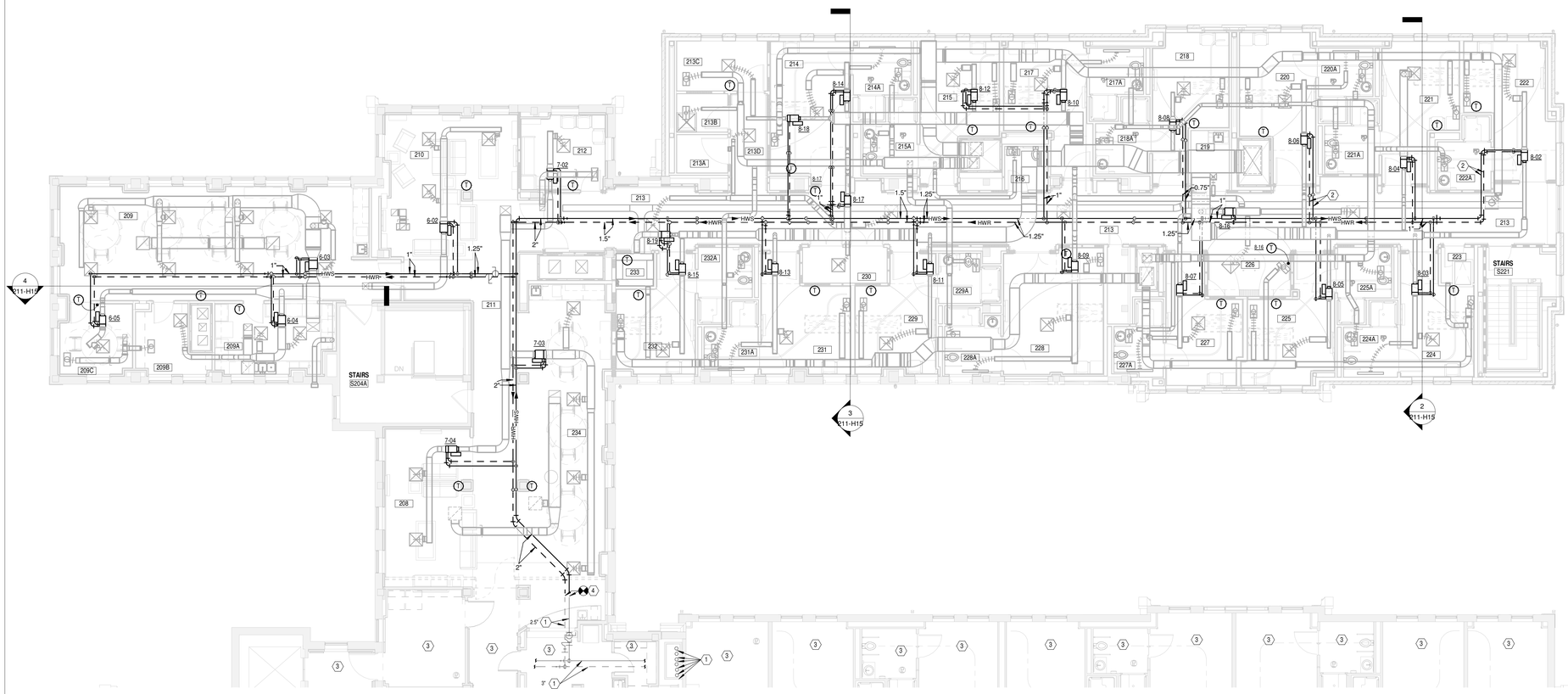

PARTIAL SECOND FLOOR PLAN - PIPING

Scale: 1/8" = 1'-0"

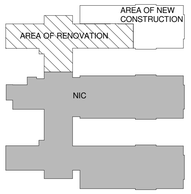

SECOND FLOOR NEW WORK KEYPLAN

Scale: N.T.S.

Revisions	Date

CONSULTANTS:

Heapy Engineering
Mechanical Electrical Commissioning Technology
Nationally Recognized Leader in Sustainability / LEED
1400 W Dorothy Lane, Dayton OH 45409-1310
Ph: 937-224-0861 Fax: 937-224-5777 www.heapy.com
PROJECT NO. 2010-04024 FIRM LICENSE NO. 01528

STATE OF OHIO — JOHN A. BLACK 49341 — REGISTERED PROFESSIONAL ENGINEER

ARCHITECT/ENGINEERS:

JOHN POE ARCHITECTS
116 EAST THIRD STREET
DAYTON, OHIO
45402-2130
937 461 3290 PHONE
937 461 0260 FAX
jpa@johnpoe.com

Drawing Title: PARTIAL SECOND FLOOR PLAN - PIPING

Approved: Project Director

Project Title: RENOVATE CLC BUILDING 211 WEST

Location: Chillicothe, Ohio

Date: 09/06/2013 | Checked: JAC | Drawn: TEG

Project No. VA Project No. 538-107 JPA Project No. 11001.00

Building Number: 211

Drawing Number: 211-H12

Dwg. 99 of 132

Office of Construction and Facilities Management

Department of Veterans Affairs

9/6/2013 1:29:57 PM

FULLY SPRINKLERED

GENERAL NOTES

A REFER TO SHEET H1 FOR LEGEND, ABBREVIATIONS AND ADDITIONAL GENERAL NOTES.

B REFER TO ELECTRICAL DRAWINGS FOR VARIABLE SPEED MOTOR CONTROLLERS ASSOCIATED WITH MECHANICAL EQUIPMENT IN ATTIC.

C APPROXIMATE ELEVATIONS NOTED ARE TO THE CENTER OF THE DUCT.

D WHERE NEW WORK REQUIRES CUTTING THROUGH EXISTING STRUCTURAL CONCRETE FLOOR SLABS, CONTRACTOR SHALL COORDINATE CUTTING TO AVOID CUTTING STRUCTURAL ELEMENTS, INCLUDING BEAMS, COLUMNS, ETC.

NOTES

1 NEW 60" x 60" LOUVER BY G.C. - REFER TO ARCHITECTURAL DRAWINGS AND SPECIFICATIONS. CONNECT NEW DUCT TO LOUVER, AND ENSURE AIRTIGHT AND WATERTIGHT SEAL.

2 NEW 72" x 48" LOUVER BY G.C. - REFER TO ARCHITECTURAL DRAWINGS AND SPECIFICATIONS. CONNECT NEW DUCT TO LOUVER, TO ENSURE AIRTIGHT AND WATERTIGHT SEAL.

3 NEW 120" x 60" LOUVER BY G.C. - REFER TO ARCHITECTURAL DRAWINGS AND SPECIFICATIONS. CONNECT NEW DUCT TO LOUVER, AND ENSURE AIRTIGHT AND WATERTIGHT SEAL.

4 THIS LOUVER SHALL BE REMOVABLE FOR FUTURE EQUIPMENT REPLACEMENT.

5 PROVIDE 2" THICK DOUBLE WALL INSULATED BLANK-OFF PANEL ON BACK OF LOUVER, FULL SIZE OF LOUVER. SEAL AIR AND WATER TIGHT.

6 PROVIDE ACCESS PLATFORM WITH ANGLE FRAME AND GRATING AS SHOWN, FOR EQUIPMENT MAINTENANCE ACCESSIBILITY. PROVIDE STEPS ON BOTH ENDS OF PLATFORM AS REQUIRED TO ADEQUATELY CLEAR PIPING/DUCTWORK UNDERNEATH. REFER TO 05 50 00 METAL FABRICATIONS.

7 DUCT THROUGH ATTIC FLOOR WITH TYPE B STATIC FIRE DAMPER AT SLAB, ACCESS FROM ATTIC. REFER TO SECOND FLOOR DUCTWORK PLAN ON SHEET 211-H11 FOR CONTINUATION AND RISER SIZES. PRIOR TO POURING OF NEW FLOOR SLAB OR CUTTING OF EXISTING SLAB, COORDINATE FLOOR SLAB OPENING SLEEVE SIZE WITH G.C., TAKING INTO ACCOUNT RECESSED BLADE FIRE DAMPER CLEARANCE REQUIREMENTS. COORDINATE PENETRATIONS WITH NEW STRUCTURAL STEEL FRAMING AROUND DUCTS - REFER TO STRUCTURAL PLANS.

8 PROVIDE 3" HIGH CONCRETE CURB AROUND DUCT PENETRATION(S).

9 HUMIDIFIER DISPERSION TUBE. INSTALL PER MANUFACTURERS RECOMMENDATIONS.

10 MOUNT AIR HANDLING UNIT ON BASE RAIL OR SUPPLEMENTAL ANGLE FRAME SUPPORT TO ATTAIN VERTICAL HEIGHT REQUIRED FOR PROPER OPERATION OF COOLING COIL CONDENSATE TRAP. REFER TO DETAIL ON SHEET H6.

11 EXISTING PIPING TO REMAIN.

12 PROVIDE 4" HIGH CONCRETE PAD. REFER TO DETAIL ON SHEET H3.

13 PROVIDE THERMALLY INSULATED TWO POSITION MOTORIZED DAMPER FULL SIZE OF AHU RELIEF AIR DUCT. REFER TO SHEET H9 AND SPECIFICATION SECTION 23 09 23 FOR ADDITIONAL DAMPER REQUIREMENTS.

14 PROVIDE GRAVITY BACKDRAFT DAMPER FULL SIZE OF EXHAUST DUCT.

15 SUSPEND INLINE FAN FROM ROOF STRUCTURE WITH HANGER RODS AND SPRING OR NEOPRENE VIBRATION ISOLATORS, AS REQUIRED BY 23 05 41.

16 SUPPORT INLINE FAN FROM FLOOR SLAB, WITH RESTRAINT AND VIBRATION ISOLATION AS REQUIRED BY 23 05 41.

17 PROVIDE DUCT ACCESS PANEL AT THIS LOCATION AS REQUIRED BY 23 31 00 FOR ACCESS TO FIRE DAMPER, SMOKE DAMPER, SMOKE DETECTOR (PROVIDED BY E.C.) AUTOMATIC CONTROL DAMPER, OR HUMIDIFIER DISPERSION TUBE. REFER TO DETAIL ON SHEET H5. COORDINATE SIZE AND LOCATION WITH ACCESSORIES PROVIDED BY OTHER TRADES, WHERE APPLICABLE.

18 PITCH DOWN IN DIRECTION OF FLOW AND EXTEND FULL SIZE DRAIN PIPE TO FLOOR DRAIN. REFER TO DRAIN TRAP DETAIL ON SHEET H6.

19 PROVIDE NEW DDC CONTROL PANEL(S) AND MOUNT ON PLYWOOD BACKBOARD PROVIDED BY DIVISION 26. REFER TO ELECTRICAL DRAWINGS AND COORDINATE MOUNTING LOCATION. REFER TO SHEET H9 AND SPECIFICATION SECTION 23 09 23 FOR ADDITIONAL INFORMATION.

20 PROVIDE FLEXIBLE CONNECTIONS BETWEEN EQUIPMENT AND SHEETMETAL DUCTWORK. REFER TO SPECIFICATIONS AND DETAIL ON SHEET H4.

21 EXISTING ACCESS PLATFORM TO REMAIN.

22 VARIABLE SPEED MOTOR CONTROLLER FOR AIR HANDLING UNIT SUPPLY FAN(S). REFER TO ELECTRICAL DRAWINGS.

23 VARIABLE SPEED MOTOR CONTROLLER FOR AIR HANDLING UNIT RETURN FAN(S). REFER TO ELECTRICAL DRAWINGS.

24 MAINTAIN CLEAR AREA FOR AHU COMPONENT PULL SPACE.

25 DUCT FULL SIZE OF AIR HANDLING UNIT CONNECTION.

26 PROVIDE MANUAL BALANCING DAMPER IN VERTICAL DUCT.

27 TRANSITION DUCT TO FULL SIZE OF LOUVER. SLOPE BOTTOM OF TRANSITION TO DRAIN TO LOUVER.

28 PROVIDE FULL SIZE INSULATED PLENUM DUCT BEHIND LOUVER OF DEPTH NOTED. SEAL AIR AND WATER TIGHT. SLOPE BOTTOM OF PLENUM TO DRAIN TO LOUVER.

29 PIPE ANCHORS. INSTALL PER MANUFACTURER'S REQUIREMENTS.

30 TO WASTE MANIFOLD CONDENSATE TO NEAREST FLOOR DRAIN, IF HEIGHT PROHIBITS DRAINING BACK HUMIDIFIER TANK. REFER TO HUMIDIFIER DETAIL ON SHEET H3.

31 REFER TO HUMIDIFIER PIPING DETAIL ON SHEET H3 FOR DETAILS.

32 PROVIDE AND MOUNT AIR HANDLING UNIT ON 4" HIGH FULL PERIMETER STEEL CHANNEL, IN LIEU OF CONCRETE HOUSE-KEEPING PAD.

33 TYPICAL STEAM MAIN DRIP. REFER TO DETAIL ON SHEET H6.

34 PROVIDE 36" DEEP DOUBLE WALL INSULATED PLENUM CASING BEHIND NEW 120" x 60" LOUVER. CONSTRUCT PER 23 31 00.

35 SECTION OF DUCTWORK TO BE EASILY REMOVED AND REINSTALLED IN FUTURE. FOR ACCESS TO MOTORIZED DAMPER. ENSURE AIR TIGHT SEAL.

36 20"X54" DOUBLE WALL INSULATED ACCESS DOOR WITH VISION WINDOW.

37 PROVIDE 36" DEEP DOUBLE WALL INSULATED PLENUM CASING BEHIND NEW 120X60" LOUVER. INSTALL INTERNAL SHEETMETAL BAFFLE TO ACHIEVE 26" WIDE EXHAUST SECTION AND 94" WIDE RELIEF SECTION. CONSTRUCT PER 23 31 00.

38 ISOLATION SMOKE CONTROL DAMPER FOR AIR HANDLING UNIT. REFER TO SPECIFICATION SECTION 23 09 23, AND CONTROL DIAGRAMS AND SEQUENCES ON SHEET H10.

39 PIPE MOMENT GUIDES. INSTALL PER MANUFACTURER'S REQUIREMENTS.

40 PROVIDE 4"X4" CONCRETE CURB BENEATH ENTIRE PERIMETER OF DOUBLE WALL INSULATED PLENUM CASING. FASTEN PLENUM CASING SECURELY TO CURB AND SEAL AIRTIGHT.

41 HARD PIPE LOOP FOR THERMAL EXPANSION. INSTALL PER DIMENSIONS SHOWN.

42 TRANSITION DUCT TO FULL SIZE OF LOUVER.

43 HEATING HOT WATER SYSTEM DIFFERENTIAL PRESSURE SENSOR BETWEEN SUPPLY AND RETURN PIPING. FOR CONTROL OF PUMP VARIABLE SPEED MOTOR CONTROLLERS. REFER TO CONTROL DIAGRAMS & SEQUENCES ON SHEET H10 FOR MORE INFORMATION.

44 CHILLED WATER SYSTEM DIFFERENTIAL PRESSURE SENSOR BETWEEN SUPPLY AND RETURN PIPING. FOR CONTROL OF PUMP VARIABLE SPEED MOTOR CONTROLLERS. REFER TO CONTROL DIAGRAMS & SEQUENCES ON SHEET H10 FOR MORE INFORMATION.

45 APPROXIMATE LOCATION OF EDGE OF EXISTING ROOF TO REMAIN.

46 REMOVE EXISTING PIPE CAPS AND TIE INTO EXISTING PIPES AT THIS APPROXIMATE LOCATION.

47 PITCH DOWN IN DIRECTION OF FLOW AND EXTEND FULL SIZE DRAIN PIPE TO FLOOR DRAIN. REFER TO HUMIDIFIER DETAIL ON SHEET H3 FOR REQUIRED TRAP HEIGHT.

48 MOUNT NEW DDC THERMOSTAT ON NEAREST LIGHT GAGE METAL ROOF TRUSS.

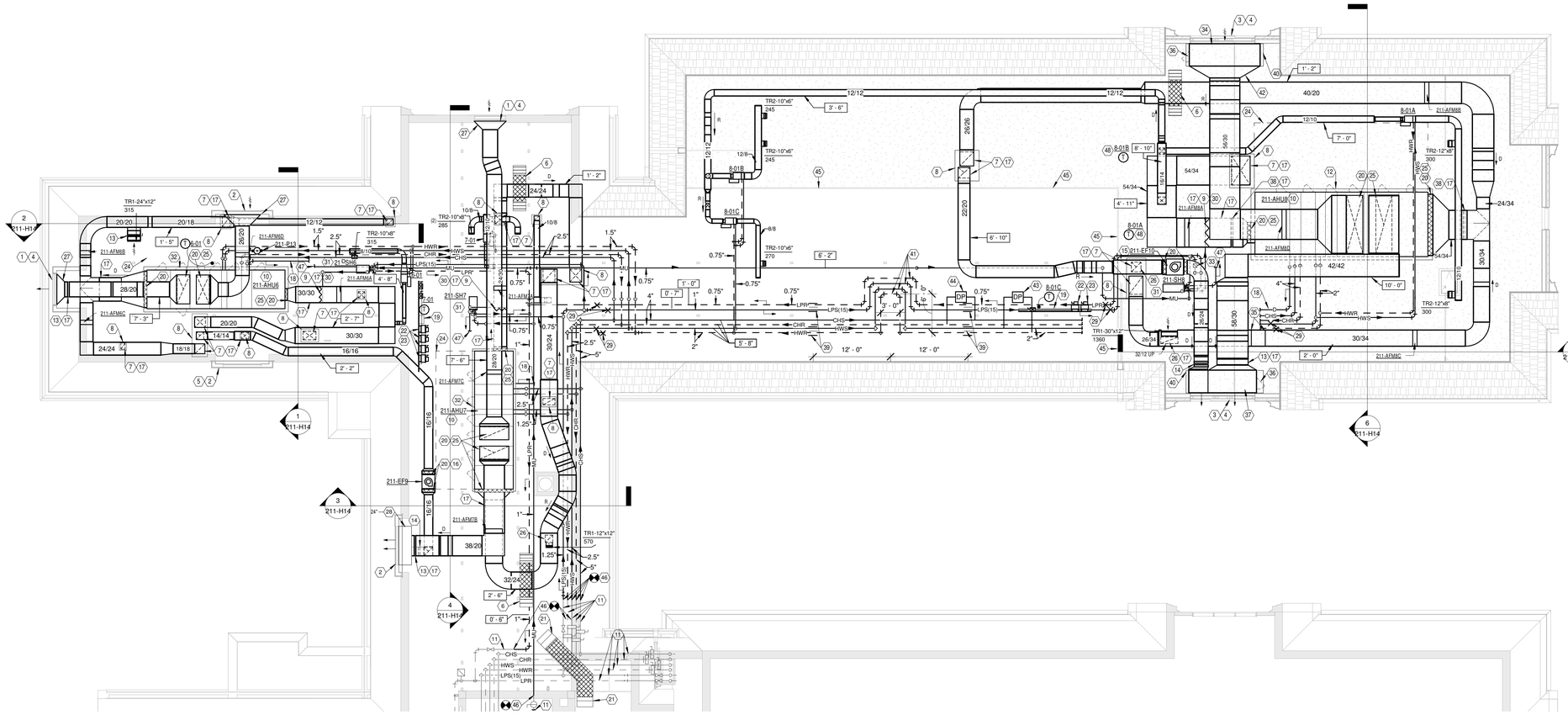

PARTIAL ATTIC FLOOR PLAN - NEW WORK

Scale: 1/8" = 1'-0"

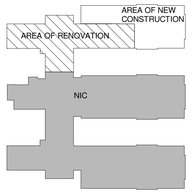

ATTIC NEW WORK KEYPLAN

Scale: N.T.S.

Revisions	Date

CONSULTANTS:

Heapy Engineering
Mechanical Electrical Commissioning Technology
Nationally Recognized Leader in Sustainability / LEED
1400 W Dorothy Lane, Dayton OH 45409-1310
Ph: 937-224-0861 Fax: 937-224-5777 www.heapy.com
PROJECT NO. 2010-04024 FIRM LICENSE NO. 01528

STATE OF OHIO — JOHN A. BLACK 49341 — REGISTERED PROFESSIONAL ENGINEER

ARCHITECT/ENGINEERS:

JOHN POE ARCHITECTS
116 EAST THIRD STREET
DAYTON, OHIO
45402-2130
937 461 3290 PHONE
937 461 0260 FAX
jpa@johnpoe.com

Drawing Title: PARTIAL ATTIC FLOOR PLAN - NEW WORK

Approved: Project Director

Project Title: RENOVATE CLC BUILDING 211 WEST

Location: Chillicothe, Ohio

Date: 09/06/2013 | Checked: JAC | Drawn: TEG

Project No. VA Project No. 538-107 JPA Project No. 11001.00

Building Number: 211

Drawing Number: 211-H13

Dwg. 100 of 132

Office of Construction and Facilities Management

Department of Veterans Affairs

9/6/2013 1:30:05 PM

FULLY SPRINKLERED

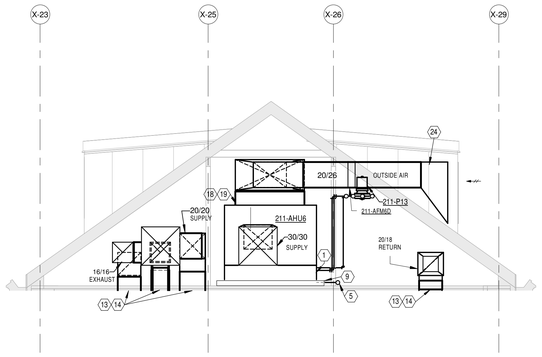

1 211-AHU6 SECTION - NORTH
Scale: 1/4" = 1'-0"

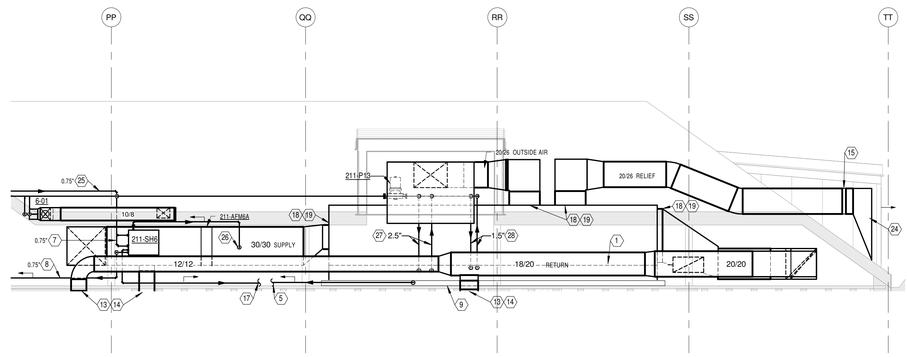

2 211-AHU6 SECTION - WEST
Scale: 1/4" = 1'-0"

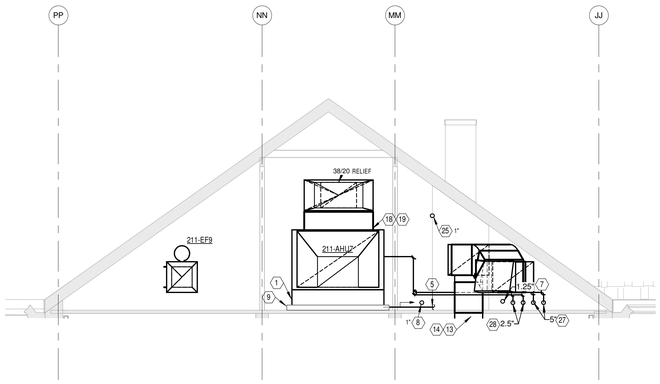

3 211-AHU7 SECTION - EAST
Scale: 1/4" = 1'-0"

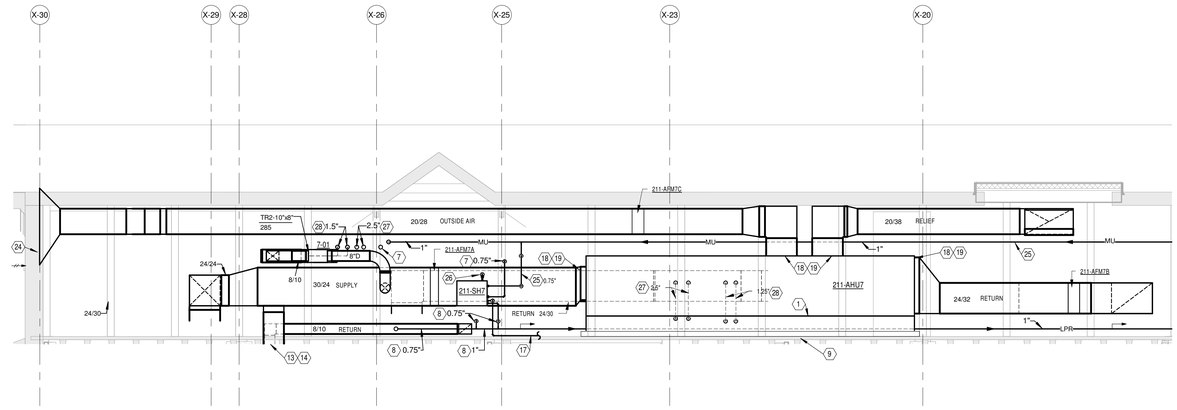

4 211-AHU7 SECTION - SOUTH
Scale: 1/4" = 1'-0"

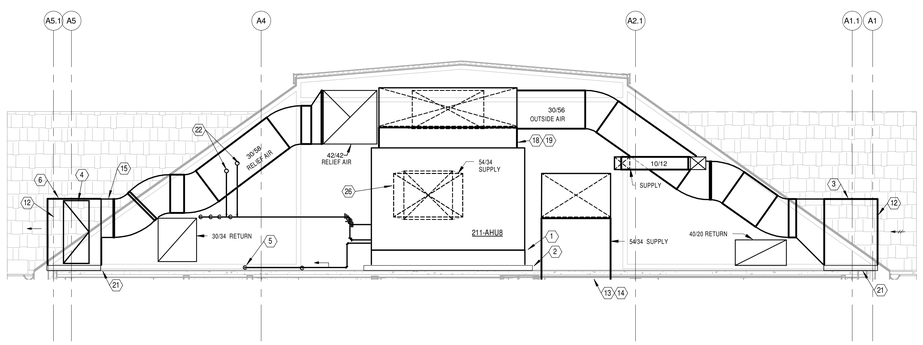

6 211-AHU8 SECTION - NORTH
Scale: 1/4" = 1'-0"

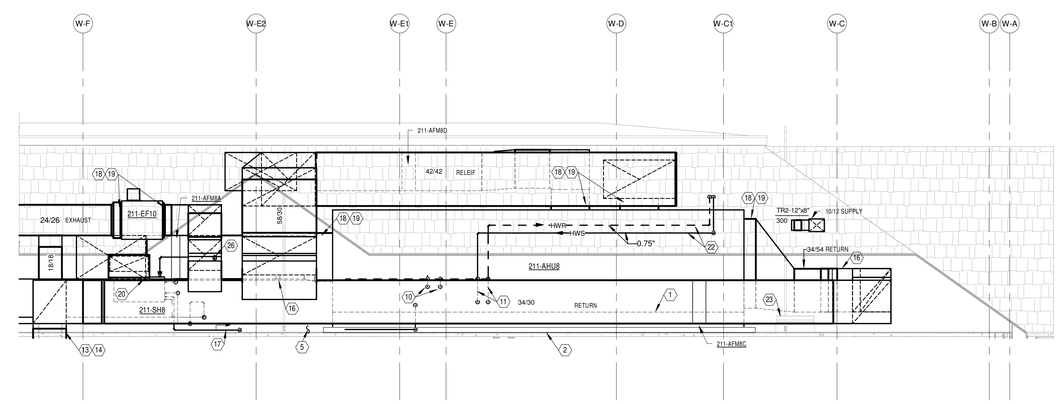

5 211-AHU8 SECTION - EAST
Scale: 1/4" = 1'-0"

GENERAL NOTES

A REFER TO SHEET H1 FOR LEGEND, ABBREVIATIONS AND ADDITIONAL GENERAL NOTES.

NOTES

1 MOUNT AIR HANDLING UNIT ON BASE RAIL OR SUPPLEMENTAL ANGLE FRAME SUPPORTS TO ATTAIN VERTICAL HEIGHT REQUIRED FOR PROPER OPERATION OF COOLING COIL CONDENSATE TRAP. REFER TO DETAIL ON SHEET H6.

2 PROVIDE 4" HIGH CONCRETE BASE.

3 PROVIDE 36" DEEP DOUBLE WALL INSULATED PLENUM CASING BEHIND NEW 120" x 60" LOUVER.

4 20"X50" DOUBLE WALL INSULATED ACCESS DOOR WITH VISION WINDOW.

5 EXTEND FULL SIZE DRAIN PIPE TO FLOOR DRAIN. REFER TO DRAIN TRAP DETAIL ON SHEET H6.

6 PROVIDE 36" DEEP DOUBLE WALL INSULATED PLENUM CASING BEHIND NEW 120"X60" LOUVER. INSTALL INTERNAL SHEETMETAL BAFFLE TO ACHIEVE 26" WIDE EXHAUST SECTION AND 94" WIDE RELIEF SECTION.

7 LOW PRESSURE STEAM SUPPLY PIPE.

8 LOW PRESSURE STEAM CONDENSATE RETURN PIPE

9 PROVIDE AND MOUNT AIR HANDLING UNIT ON 4" HIGH FULL PERIMETER STEEL CHANNEL, IN LIEU OF CONCRETE HOUSE-KEEPING PAD.

10 4" CHILLED WATER SUPPLY AND RETURN PIPING.

11 2" HEATING HOT WATER SUPPLY AND RETURN PIPING.

12 NEW 120" x 60" LOUVER. REFER TO ARCHITECTURAL DRAWINGS AND SPECIFICATIONS.

13 DUCT THROUGH ATTIC FLOOR WITH TYPE B STATIC FIRE DAMPER AT SLAB, ACCESS FROM ATTIC. REFER TO SECOND FLOOR DUCTWORK PLAN ON SHEET 211-H11 FOR CONTINUATION AND RISER SIZES. PRIOR TO POURING OF NEW FLOOR SLAB OR CUTTING OF EXISTING SLAB, COORDINATE FLOOR SLAB OPENING SLEEVE SIZE WITH G.C., TAKING INTO ACCOUNT RECESSED BLADE FIRE DAMPER CLEARANCE REQUIREMENTS.

14 PROVIDE 3" HIGH CONCRETE CURB AROUND DUCT PENETRATION(S).

15 PROVIDE THERMALLY INSULATED TWO POSITION MOTORIZED DAMPER FULL SIZE OF DUCT. REFER TO SHEET H10 AND SPECIFICATION SECTION 23 09 23 FOR ADDITIONAL DAMPER REQUIREMENTS.

16 ISOLATION SMOKE CONTROL DAMPER FOR AIR HANDLING UNIT. REFER TO CONTROL DIAGRAMS AND SEQUENCES ON SHEET H10.

17 PITCH DOWN IN DIRECTION OF FLOW AND EXTEND FULL SIZE DRAIN PIPE TO FLOOR DRAIN. REFER TO HUMIDIFIER DETAIL ON SHEET H3 FOR REQUIRED TRAP HEIGHT.

18 DUCT FULL SIZE OF AIR HANDLING UNIT CONNECTION.

19 PROVIDE FLEXIBLE CONNECTIONS BETWEEN EQUIPMENT AND SHEETMETAL DUCTWORK. REFER TO SPECIFICATIONS AND DETAIL ON SHEET H4.

20 PROVIDE MANUAL BALANCING DAMPER IN VERTICAL DUCT.

21 PROVIDE 4"X4" CONCRETE CURB BENEATH ENTIRE PERIMETER OF DOUBLE WALL INSULATED PLENUM CASING. FASTEN PLENUM CASING SECURELY TO CURB AND SEAL AIRTIGHT.

22 0.75" AIR TERMINAL UNIT REHEAT COIL RUNOUT PIPING.

23 NEW ROOF HATCH BY G.C. COORDINATE AND MAINTAIN CLEARANCE FOR HATCH OPERATION.

24 TRANSITION DUCT TO FULL SIZE OF LOUVER. SLOPE BOTTOM OF TRANSITION TO DRAIN TO LOUVER.

25 WATER MAKE-UP PIPE FOR STEAM HUMIDIFIER. REFER TO FLOOR PLANS FOR MORE DETAIL.

26 HUMIDIFIER DISPERSION TUBE. INSTALL PER MANUFACTURERS RECOMMENDATIONS.

27 CHILLED WATER SUPPLY AND RETURN PIPING.

28 HEATING HOT WATER SUPPLY AND RETURN PIPING.

Revisions	Date

CONSULTANTS:

Heapy Engineering
Mechanical Electrical Commissioning Technology
Nationally Recognized Leader in Sustainability / LEED
1400 W Dorothy Lane, Dayton OH 45409-1310
Ph: 937-224-0861 Fax: 937-224-5777 www.heapy.com
PROJECT NO. 2010-04024 FIRM LICENSE NO. 01528

STATE OF OHIO — JOHN A. BLACK 49341 — REGISTERED PROFESSIONAL ENGINEER

ARCHITECT/ENGINEERS:

JOHN POE ARCHITECTS
116 EAST THIRD STREET
DAYTON, OHIO
45402-2130
937 461 3290 PHONE
937 461 0260 FAX
jpa@johnpoe.com

Drawing Title: ATTIC SECTIONS

Approved: Project Director

Project Title: RENOVATE CLC BUILDING 211 WEST

Location: Chillicothe, Ohio

Date: 09/06/2013 | Checked: JAC | Drawn: TEG

Project No. VA Project No. 538-107 JPA Project No. 11001.00

Building Number: 211

Drawing Number: 211-H14

Dwg. 101 of 132

Office of Construction and Facilities Management
Department of Veterans Affairs

9/6/2013 1:30:23 PM

FULLY SPRINKLERED

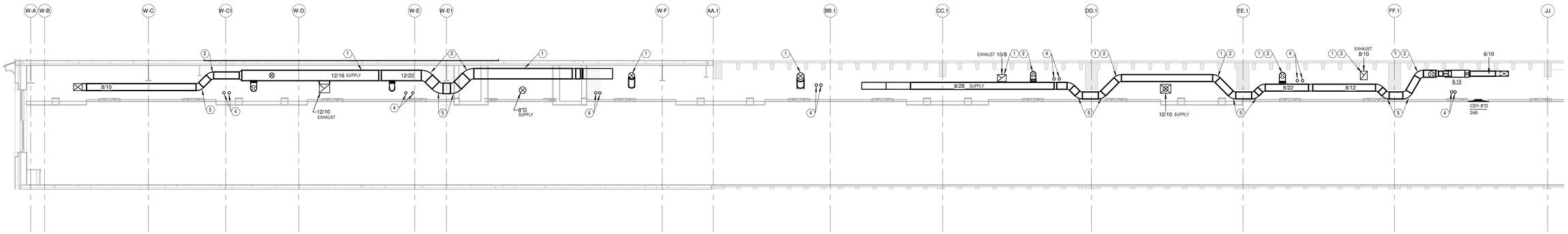

1 SECOND FLOOR CORRIDOR

Scale: 1/4" = 1'-0"

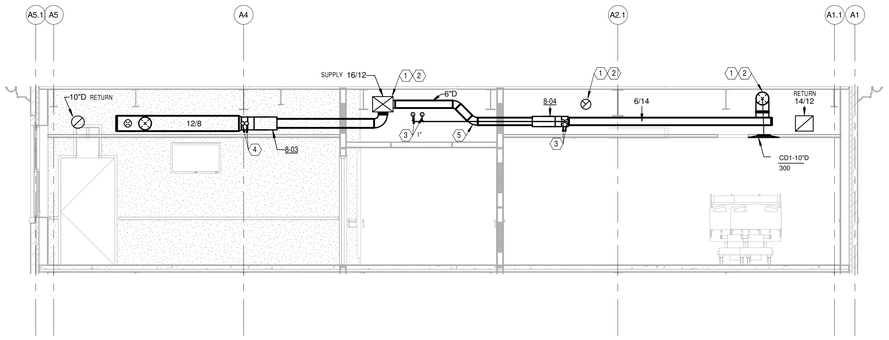

2 SECOND FLOOR PATIENT ROOM - ADDITION

Scale: 1/4" = 1'-0"

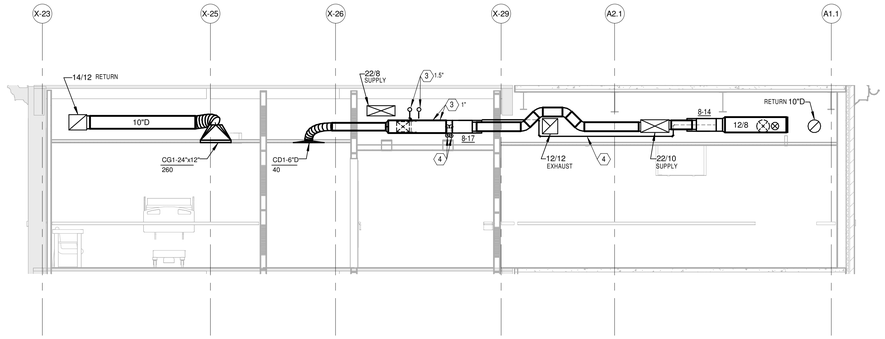

3 SECOND FLOOR PATIENT ROOM - NEW AND EXISTING BUILDING

Scale: 1/4" = 1'-0"

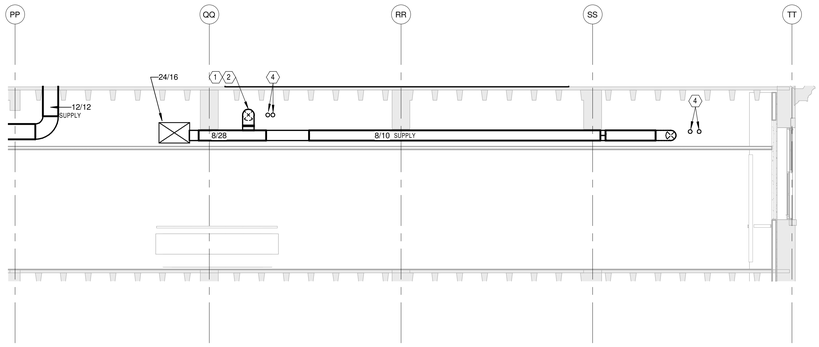

4 SOUTH WEST WING - SECOND FLOOR

Scale: 1/4" = 1'-0"

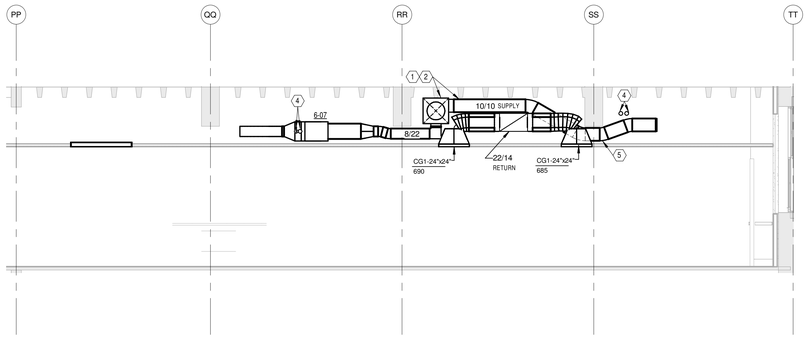

5 SOUTH WEST WING FIRST FLOOR

Scale: 1/4" = 1'-0"

GENERAL NOTES

A REFER TO SHEET H1 FOR LEGEND, ABBREVIATIONS AND ADDITIONAL GENERAL NOTES.

NOTES

1 ROUTE DUCT UP IN BEAM SPACE.

2 RUN DUCT AS HIGH AS POSSIBLE. COORDINATE HEIGHT WITH WORK FOR OTHER TRADES.

3 HEATING HOT WATER SUPPLY AND RETURN PIPING OF SIZE INDICATED.

4 0.75" AIR TERMINAL UNIT REHEAT COIL RUNOUT PIPING.

5 TYPICAL DUCT OFFSET TO AVOID STRUCTURAL BEAM.

Revisions	Date

CONSULTANTS:

Heapy Engineering
Mechanical Electrical Commissioning Technology
Nationally Recognized Leader in Sustainability / LEED
1400 W Dorothy Lane, Dayton OH 45409-1310
Ph: 937-224-0861 Fax: 937-224-5777 www.heapy.com
PROJECT NO. 2010-04024 FIRM LICENSE NO. 01528

STATE OF OHIO — JOHN A. BLACK 49341 — REGISTERED PROFESSIONAL ENGINEER

ARCHITECT/ENGINEERS:

JOHN POE ARCHITECTS
116 EAST THIRD STREET
DAYTON, OHIO
45402-2130
937 461 3290 PHONE
937 461 0260 FAX
jpa@ohnpoe.com

Drawing Title: BUILDING SECTIONS

Approved: Project Director

Project Title: RENOVATE CLC BUILDING 211 WEST

Location: Chillicothe, Ohio

Date: 09/06/2013 | Checked: JAC | Drawn: TEG

Project No. VA Project No. 538-107 JPA Project No. 11001.00

Building Number: 211

Drawing Number: 211-H15

Dwg. 102 of 132

Office of Construction and Facilities Management

Department of Veterans Affairs

9/6/2013 1:30:39 PM