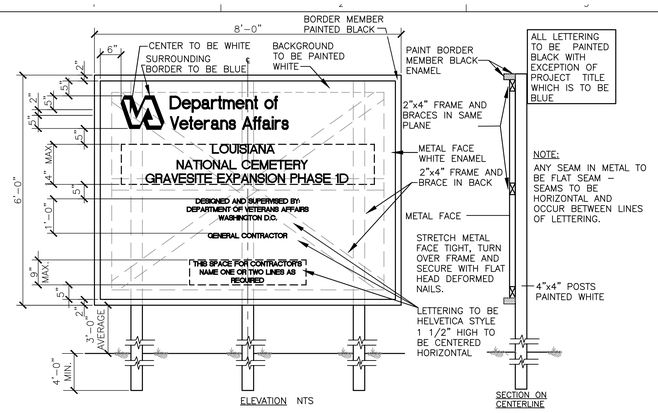

B1 PROJECT CONSTRUCTION SIGN (To Be Located Just Inside Entry Gates During Construction)

NO SCALE

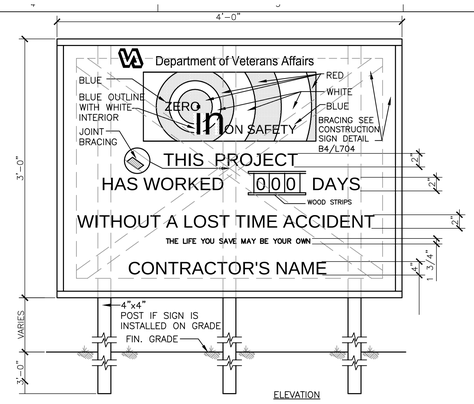

B4 PROJECT SAFETY SIGN (To Be Located in the Field)

NO SCALE

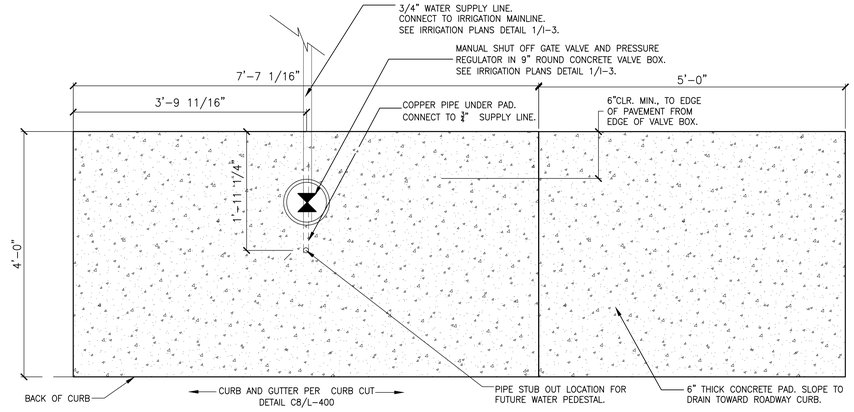

B7 CONCRETE PAD (FUTURE WATERING STATION) - PLAN

NOT TO SCALE

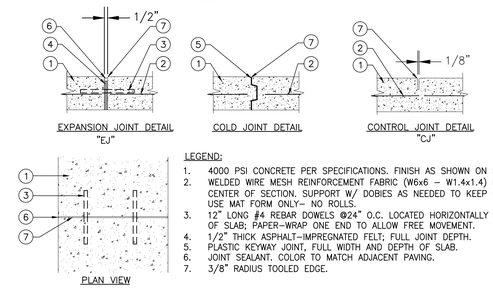

LEGEND:

1. 4000 PSI CONCRETE PER SPECIFICATIONS. FINISH AS SHOWN ON PLANS.
2. WELDED WIRE MESH REINFORCEMENT FABRIC (W6x6 – W1.4x1.4) PLACED IN CENTER OF SECTION. SUPPORT W/ DOBIES AS NEEDED TO KEEP CENTERED. USE MAT FORM ONLY– NO ROLLS.
3. 12" LONG #4 REBAR DOWELS @24" O.C. LOCATED HORIZONTALLY IN CENTER OF SLAB; PAPER–WRAP ONE END TO ALLOW FREE MOVEMENT.
4. 1/2" THICK ASPHALT–IMPREGNATED FELT; FULL JOINT DEPTH.
5. PLASTIC KEYWAY JOINT, FULL WIDTH AND DEPTH OF SLAB.
6. JOINT SEALANT. COLOR TO MATCH ADJACENT PAVING.
7. 3/8" RADIUS TOOLED EDGE.

C3 EXPANSION AND CONTROL JOINTS

NO SCALE

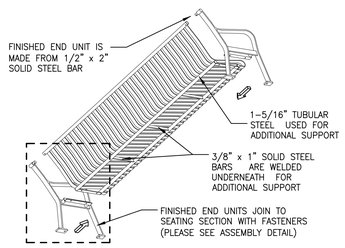

AVAILABLE OPTIONS:

POWDER COATING – COLOR: VS BLACK

INTERMEDIATE & CENTER ARMRESTS
4', 6', & 8' AVAILABLE WITH OPTIONAL 3/8" x 1" SOLID STEEL ARMRESTS

NOTES:

1. DRAWING NOT TO SCALE. DO NOT SCALE DRAWINGS.
2. ALL FABRICATED METAL COMPONENTS ARE STEEL SHOTBLASTED, ETCHED, PHOSPHATIZED, PREHEATED, AND ELECTROSTATICALLY POWDER–COATED WITH T.G.I.C. POLYESTER POWDER COATINGS. PRODUCTS ARE FULLY CLEANED AND PRETREATED, PREHEATED AND COATED WHILE HOT TO FILL CREVICES AND BUILD COATING FILM. COATED PARTS ARE THEN FULLY CURED TO COATING MANUFACTURER'S SPECIFICATIONS. THE THICKNESS OF THE RESULTING FINISH COAT AVERAGES 8–10 MILS (200–250 MICRONS).
3. IT IS NOT RECOMMENDED TO LOCATE ANCHOR BOLTS UNTIL BENCH IS IN PLACE. THIS VICTOR STANLEY, INC. PRODUCT MUST BE PERMANENTLY AFFIXED TO THE GROUND.
4. ANCHOR BOLTS NOT PROVIDED BY VICTOR STANLEY, INC.
5. HOT DIP GALVANIZING BEFORE POWDER COATING IS REQUIRED. SEE WRITTEN SPECIFICATIONS FOR DETAILS.
6. ALL SPECIFICATIONS ARE SUBJECT TO CHANGE. CONTACT MANUFACTURER FOR DETAILS.
7. THIS PRODUCT IS SHIPPED PARTIALLY UNASSEMBLED.

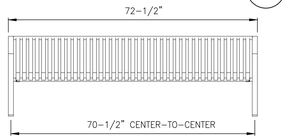

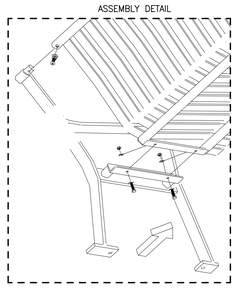

COPYRIGHT 2005 VICTOR STANLEY, INC. ALL RIGHTS RESERVED
REV. 7/29/09 DRAWN L.D.L. 2009–270

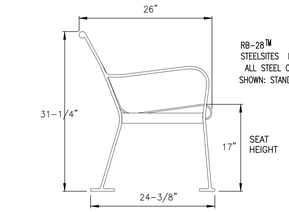

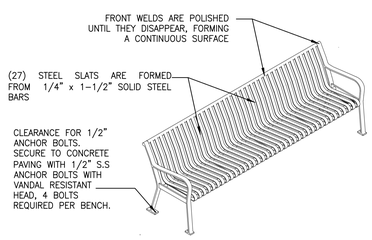

D1 BENCH - BACKED - 6'

NOT TO SCALE

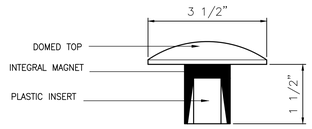

SECTION

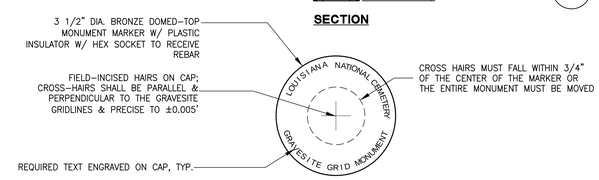

PLAN

D5 MONUMENT MARKER

NTS

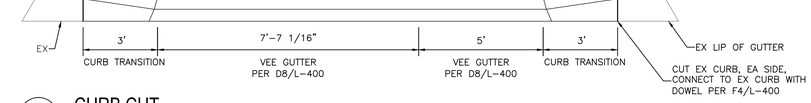

C8 CURB CUT

NOT TO SCALE

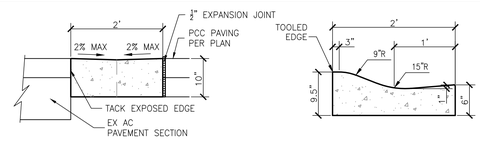

VEE GUTTER

MOUNTABLE CURB

D8 CONCRETE CURB AND GUTTER DETAILS

NOT TO SCALE

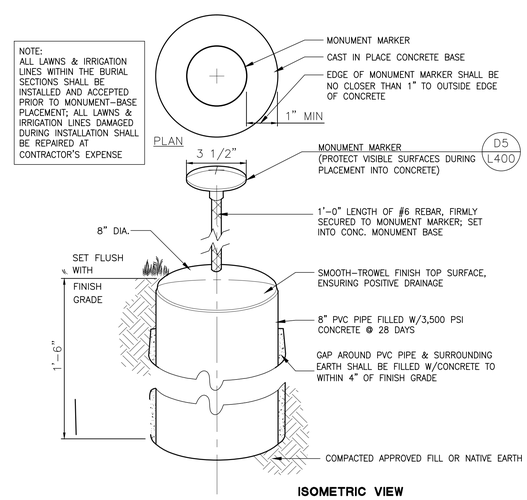

ISOMETRIC VIEW

F5 GRAVESITE GRID MONUMENT

NTS

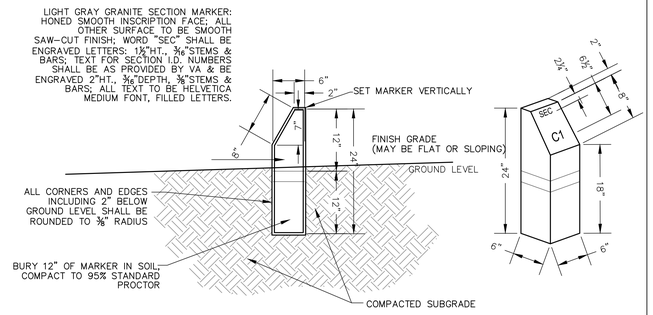

E8 TYPICAL SIGN TYPE E - SECTION MARKER

NOT TO SCALE

SIGNAGE SCHEDULE

KEY NO.	SIGN	SIGN TYPE	SIGN COPY
1	SECTION MARKER	E	SEC C1
2	SECTION MARKER	E	SEC C1

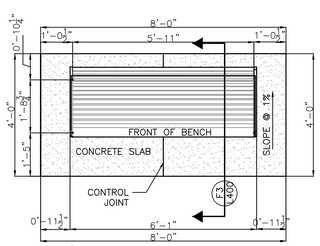

PLAN

SURFACE MOUNT BENCH TO SLAB NON–CORROSIVE MOUNTING HARDWARE 7/16" DIA. MOUNTING HOLES. SEE F3/L-400.

F1 BENCH

PLAN – SCALE 1/2" = 1'-0"

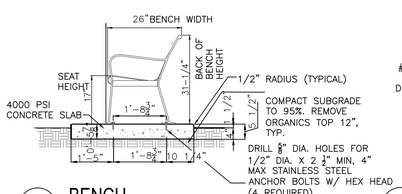

F3 BENCH

SECTION – SCALE 1/2" = 1'-0"

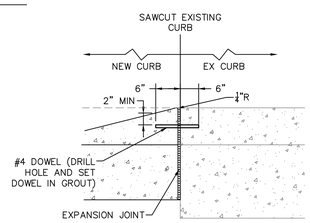

F4 DOWEL CONNECTION TO EX CURB

NOT TO SCALE

CONSTRUCTION DOCUMENTS

Revisions	Date

LICENSED LANDSCAPE ARCHITECT REBECCA McNEIL FREEMAN No. 4639 Signature 03/29/13 Renewal Date Date STATE OF CALIFORNIA

JACOBS
1050 20TH ST, STE 200
SACRAMENTO, CA 95811
PHONE (916) 929-3323 FAX (916) 929-1772

Subconsultant List

AQUA ENGINEERING, INC.	4803 INNOVATION DRIVE, FORT COLLINS, CO 80525 (970) 229–9668
THE SIERRA WEST GROUP, LLC	9700 BUSINESS PARK DRIVE, SUITE 102, SACRAMENTO, CA 95827 (916) 925–4000

NATIONAL CEMETERY ADMINISTRATION

Sheet Title: SITE CONSTRUCTION DETAILS	Project Title: LOUISIANA NATIONAL CEMETERY GRAVESITE EXPANSION PHASE 1D		Date: AUGUST 5, 2013
			Project No. 870CM3023D
Approved: Director, Office of Construction Management	Building Number	Checked WMR / Drawn RJM	Sheet Reference L-400
Approved: Director, Project Management Service	Location: LOUISIANA NATIONAL CEMETERY ZACHARY, LOUISIANA		Sht. 13 of 19

CONSTRUCTION DOCUMENTS

P:\Projects\7W90728 VA IDIQ LNCID\zDrawings\000000_UDP\12_L-400 Site Construction Details.dwg 8-05-13 10:30:24 AM andersonsg